Instruction Manual

Alfa Laval Agitator ALT – ATEX

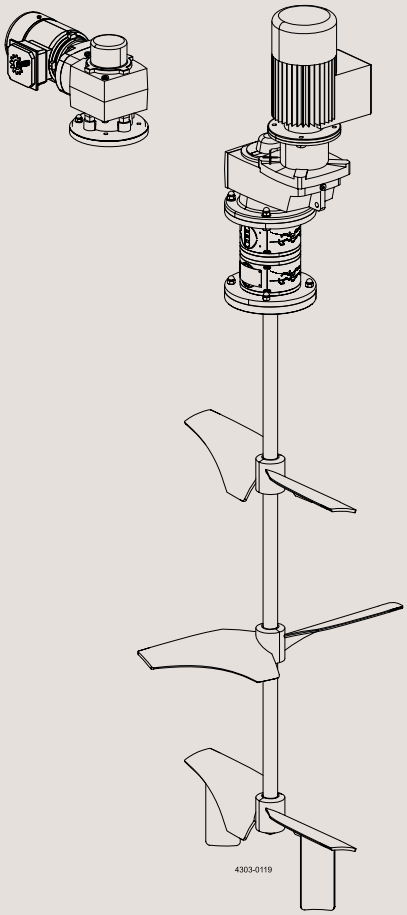

100000068-EN6 2022-12

Original manual

Table of contents

The information herein is correct at the time of issue but may be subject to change without prior notice

1 Declarations of Conformity

EU Declaration of Conformity

The Designated Company

Alfa Laval Kolding A/S, Albuen 31, DK-6000 Kolding, Denmark, +45 79 32 22 00
Company name, address and phone number

Hereby declare that

Agitator - EnSaFoil / EnSaFerm Designation	Serial number from AAC000000001 to AAC999999999 Serial number from 100700000001 to 100799999999 Serial no(s)
II 1/2G Ex h IIB T4 Ga/Gb II 1/2D Ex h IIIB T135°C Da/Db Agitator marking options	GX = GR or GP SH = S200-S2000 SDH = SD1500-SD7500 n = 2, 3, 4, 5, 6, 7, 8, 9, 10 PXXXX = E125, E150, E175, E200, E225, E250, E300, E350, E400, E450, E500, E550, E600, E650, E700, E750 E800, E900, E1000, E1100, E1300, E1500, E1700, E1900 F450, F500, F550, F600, F650, F700, F750, F800, F900, F1000, F1100, F1300, F1500 F1700, F1900 LXXXX = L600, L800, L900, L1100, L1300, L1500, L1700 YYYY = D2P, D2LP, D3P, D3LP, D2G, D2LG, D3G, D3LG Y = P, G ZZ = 30, 40, 50, 60*, 70*, 80*, 90* *SDH not available
ALT-ME-GX-ZZLLF-S-SH-(n)PXXXXYYYY(-PXXXXYYYY)(-LXXXXY) ALT-ME-GX-ZZLLF-S-SDH-(n)PXXXXYYYY(-PXXXXYYYY)(-LXXXXY) ALT-ME-GX-ZZLF-S-SH-(n)PXXXXYYYY(-PXXXXYYYY)(-LXXXXY) ALT-ME-GX-ZZLF-S-SDH-(n)PXXXXYYYY(-PXXXXYYYY)(-LXXXXY) Type	Type variation

is in conformity with the following directives with amendments:
- Machinery Directive 2006/42/EC
The following harmonized standard is used: DS/EN ISO 12100:2011 Safety of Machinery - Risk Assessment
- ATEX Directive 2014/34/EU
The following harmonised standards and regulations have been applied for non-electrical equipment for ATEX:
- EN ISO 80079-36: 2016 Basic method and requirements
- EN ISO 80079-37: 2016 Protection by constructional safety 'c' and control of ignition source 'b'

ATEX directive 2014/34/EU conformity for the gear motor unit and the mechanical shaft seal is covered by the relevant EU Type examination and declaration supplied by the manufacturer.
The QAN (Quality Assurance Notification) is carried out by SGS Fimko Oy, Särkiniementie 3, Helsinki 00211, Finland. Notified Body no. 0598.
EU Type Examination Certificate no. DTI18ATEX0096X_Rev.01.
EU Type Examination Certification is carried out by Teknologisk Institut, Kongsvang Allé 29, 8000 Aahus C, Denmark. Certification Body no. 0396.

The person authorised to compile the technical file is the signer of this document.

Global Product Quality Manager Title	Lars Kruse Andersen Name
Kolding, Denmark Place	2022–12-06 Date (YYYY-MM-DD)
	Signature

This Declaration of Conformity replaces Declaration of Conformity dated 2020-02-01

UK Declaration of Conformity

The Designated Company

Alfa Laval Kolding A/S, Albuen 31, DK-6000 Kolding, Denmark, +45 79 32 22 00
Company name, address and phone number

Hereby declare that

Agitator - EnSaFoil / EnSaFerm Designation	Serial number from AAC000000001 to AAC999999999 Serial number from 100700000001 to 100799999999 Serial no(s)
II 1/2G Ex h IIB T4 Ga/Gb II 1/2D Ex h IIIB T135°C Da/Db Agitator marking options	GX = GR or GP SH = S200-S2000 SDH = SD1500-SD7500 n = 2, 3, 4, 5, 6, 7, 8, 9, 10 PXXXX = E125, E150, E175, E200, E225, E250, E300, E350, E400, E450, E500, E550, E600, E650, E700, E750 E800, E900, E1000, E1100, E1300, E1500, E1700, E1900 F450, F500, F550, F600, F650, F700, F750, F800, F900, F1000, F1100, F1300, F1500 F1700, F1900 LXXXX = L600, L800, L900, L1100, L1300, L1500, L1700 YYYY = D2P, D2LP, D3P, D3LP, D2G, D2LG, D3G, D3LG Y = P, G ZZ = 30, 40, 50, 60*, 70*, 80*, 90* *SDH not available
ALT-ME-GX-ZZLLF-S-SH-(n)PXXXXYYYY(-PXXXXYYYY)(-LXXXXY) ALT-ME-GX-ZZLLF-S-SDH-(n)PXXXXYYYY(-PXXXXYYYY)(-LXXXXY) ALT-ME-GX-ZZLF-S-SH-(n)PXXXXYYYY(-PXXXXYYYY)(-LXXXXY) ALT-ME-GX-ZZLF-S-SDH-(n)PXXXXYYYY(-PXXXXYYYY)(-LXXXXY) Type	Type variation

is in conformity with the following directives with amendments:
- The Supply of Machinery (Safety) Regulations 2008
- The Equipment and Protective Systems Intended for use in Potentially Explosive Atmospheres Regulations 2016

The following harmonised standards and regulations have been applied for non-electrical equipment for ATEX:
- EN ISO 80079-36: 2016 Basic method and requirements
- EN ISO 80079-37: 2016 Protection by constructional safety 'c' and control of ignition source 'b'

ATEX directive 2014/34/EU conformity for the gear motor unit and the mechanical shaft seal is covered by the relevant EU Type examination and declaration supplied by the manufacturer.
The QAN (Quality Assurance Notification) is carried out by SGS Fimko Oy, Särkiniementie 3, Helsinki 00211, Finland. Notified Body no. 0598.
EU Type Examination Certificate no. DTI18ATEX0096X_Rev.01.
EU Type Examination Certification is carried out by Teknologisk Institut, Kongsvang Allé 29, 8000 Aahus C, Denmark. Certification Body no. 0396.

Signed on behalf of: Alfa Laval Kolding A/S

Global Product Quality Manager Title	Lars Kruse Andersen Name
Kolding, Denmark Place	2022–12-06 Date (YYYY-MM-DD)
	Signature

DoC Revison_01_122022

2 Safety

Unsafe practices and other important information are emphasised in this manual.
Warnings are emphasised by means of special signs.
Always read the manual before using the Agitator!
Illustrations are only to illustrate the problem and is NOT a drawing of the current Agitator!

2.1 Important information

WARNING
Indicates that special procedures must be followed to avoid serious personal injury.

CAUTION
Indicates that special procedures must be followed to avoid damage to the agitator!

NOTE
Indicates important information to simplify or clarify procedures.

2.2 Warning signs

General warning:

Dangerous electrical voltage:

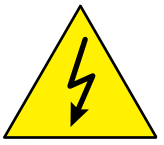

2.3 Intended use

- The Alfa Laval Agitator is only for mixing/stirring of liquids in a tank.
- The Agitator is only for mounting positions as specified on the nameplate by the first group of letters of the type designation.

ALT(B)- is for top mounting, ALS- is for side mounting and ALB- is for bottom mounting.
The exact mounting angle is specified on the Name Plate and must be followed. Definitions on mounting angles can be seen in section 6.2 Mounting angle for top mounting agitator type ALT.

- The different duties and operation data like pressure, speed and media temperature, which the Agitator is designed for, can be found in the Alfa Laval quotation agreement[1)] and may not be exceeded by all means.
- If the Agitator is installed in pressurized tanks local regulations and legislations must be met.

[1)] The Alfa Laval quotation agreement has been exchanged during the quote process between a technical purchaser and Alfa Laval. If you are not in hold of the Alfa Laval quotation agreement, please get through to your local Alfa Laval contact, inform the Agitator serial number and article number which is stated on the Name Plate and you will obtain the Alfa Laval quotation agreement.

All warnings in the manual are summarised on this page.
Pay special attention to the instructions below so that severe personal injury and/or damage to the Agitator are avoided.

2.4 Safety precautions

INSTALLATION:
Always read the technical data thoroughly (see chapter 6.1 Technical data).
Always follow installation instructions thoroughly (see chapter 3 Installation).
Never expose the Agitator to undue vibrations or shocks.
Never start Agitator in the wrong rotation direction.
Always follow drive unit installation instruction thoroughly (see chapter 8 Appendix).
Ensure that the tank media is not corrosive to the Agitator.
Only install the Agitator in environments within temperature limit: -20°C and +40°C.
Only install the Agitator in altitudes less than 1000 m above sea level.
Always ensure that the Agitator has sufficient cooling around the lantern, may not be wrapped with isolating materials.

Ensure that installation is in accordance with EN 60079-14.
Beware of ignition temperature can be decreased when enclosed by the equipment/tank (see EN 14522).
Never touch the moving parts while the Agitator is connected to the power supply.

OPERATION:
Always read the technical data thoroughly (see chapter 6.1 Technical data).
Always read supplier instructions thoroughly (see chapter 8 Appendix).
Always make sure that the Agitator corresponds to the category marked on the name plate:

Gas atmosphere:	II 1/2G Ex h IIB T4 Ga/Gb	or	II 2G Ex h IIB T4 Gb
Dust atmosphere:	II 1/2D Ex h IIIB T135°C Da/Db	or	II 2D Ex h IIIB T135°C Db

Never start Agitator in the wrong rotation direction.
Never use the Agitator for hybrid mixture.
Always rinse well with clean water after cleaning.
Beware of temperature limitations.
Beware of Agitator in operation can produce sound levels in excess of 85dB(A).
Never operate continuously within 20% of critical oscillation speed (see chapter 6.1 Technical data).

Beware of static electricity risk when the media conductivity is below 1000pS/m. (Recommendations: CLC/TR 50404 or IEC/TS60079 -32).
Never touch the moving parts while the Agitator is connected to the power supply.

MAINTENANCE:
Always read the technical data thoroughly (see chapter 6.1 Technical data).
Always follow the maintenance instruction thoroughly (see chapter 5 Maintenance).
Always follow the maintenance instruction from drive unit supplier (see chapter 8 Appendix).
Always study the parts list and assembly drawing carefully (see chapter 7 Part lists, part drawings and service kits).
Never replace ATEX Agitator with other type of Alfa Laval Agitator.
Ensure that maintenance is in accordance with relevant standards EN 60079-17 and EN 60079-19.

Never touch the moving parts while the Agitator is connected to the power supply.
Always disconnect the power supply while servicing the Agitator.

TRANSPORTATION:
Always transport the Agitator in original packaging.
Always support the shaft adequately, to protect shaft and bearings.
Never expose the Agitator to undue vibrations or shocks.
Control for oil leakage on gears with vent screw.

Ensure correct rotation direction of impeller before startup and after any maintains there might have impact on the direction.

3 Installation

The instructions manual is part of the delivery.
Study the instructions carefully.

3.1 Unpacking/delivery

Always use lifting equipment when handling the Agitator (see step 3).

CAUTION!
Alfa Laval cannot be held responsible for incorrect unpacking.

Step 1

Inspect the delivery for visible transportation damages - all issues to be reported to carrier.

Step 2
Check the delivery for:
1. Complete Agitator
2. Nameplate designations
3. Delivery note
4. Separate instruction manuals from suppliers (see chapter 8 Appendix).

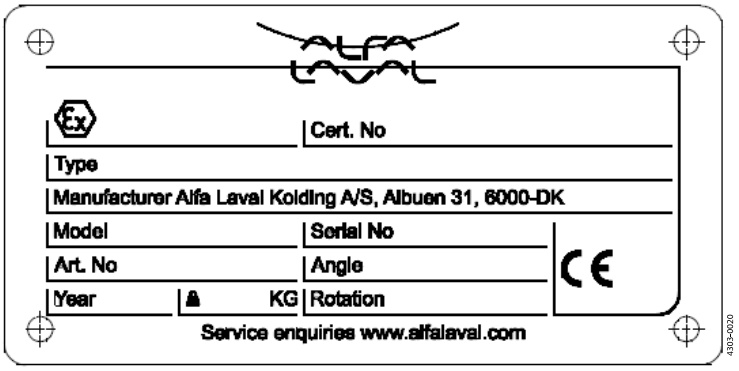

Step 3
Lifting instructions:

Always use the correct lifting equipment (see Agitator weight on name plate).
Locate Centre of gravity before moving the Agitator.

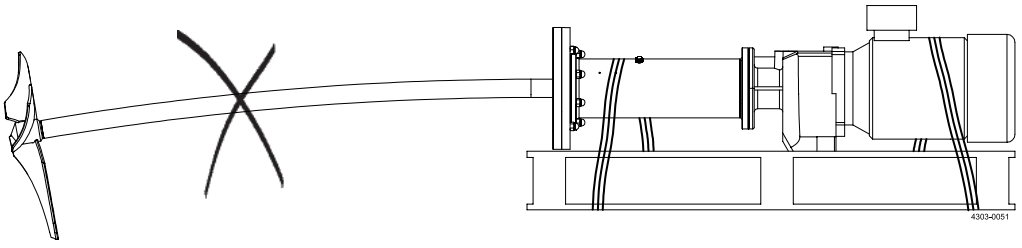

The instructions manual is part of the delivery.
Study the instructions carefully.

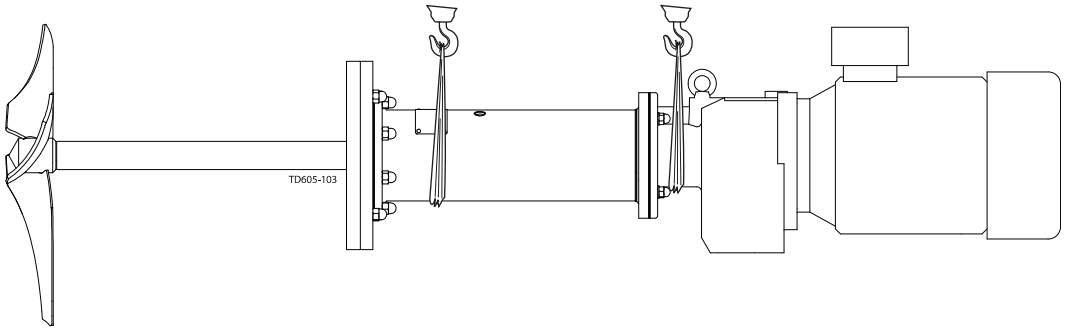

WARNING!
Do NOT use eye bolts on gear motor to lift the Agitator. They are only for gear motor removal.

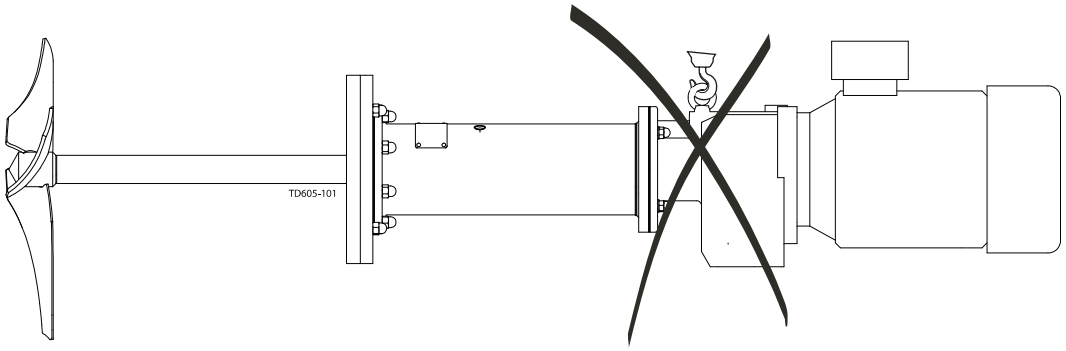

WARNING!
Do NOT use eye bolts on shroud (if any) to lift the Agitator.
They are only for shroud removal.

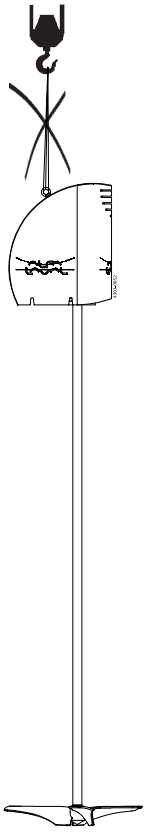

3 Installation

The instructions manual is part of the delivery.
Study the instructions carefully.

CAUTION!
Alfa Laval recommends **NOT** to use shaft as lifting point but long shafts must be supported adequately during lifting to protect shaft, bearings and seals arrangements.
Gear motor / motor may be used for lifting the assembled agitator.

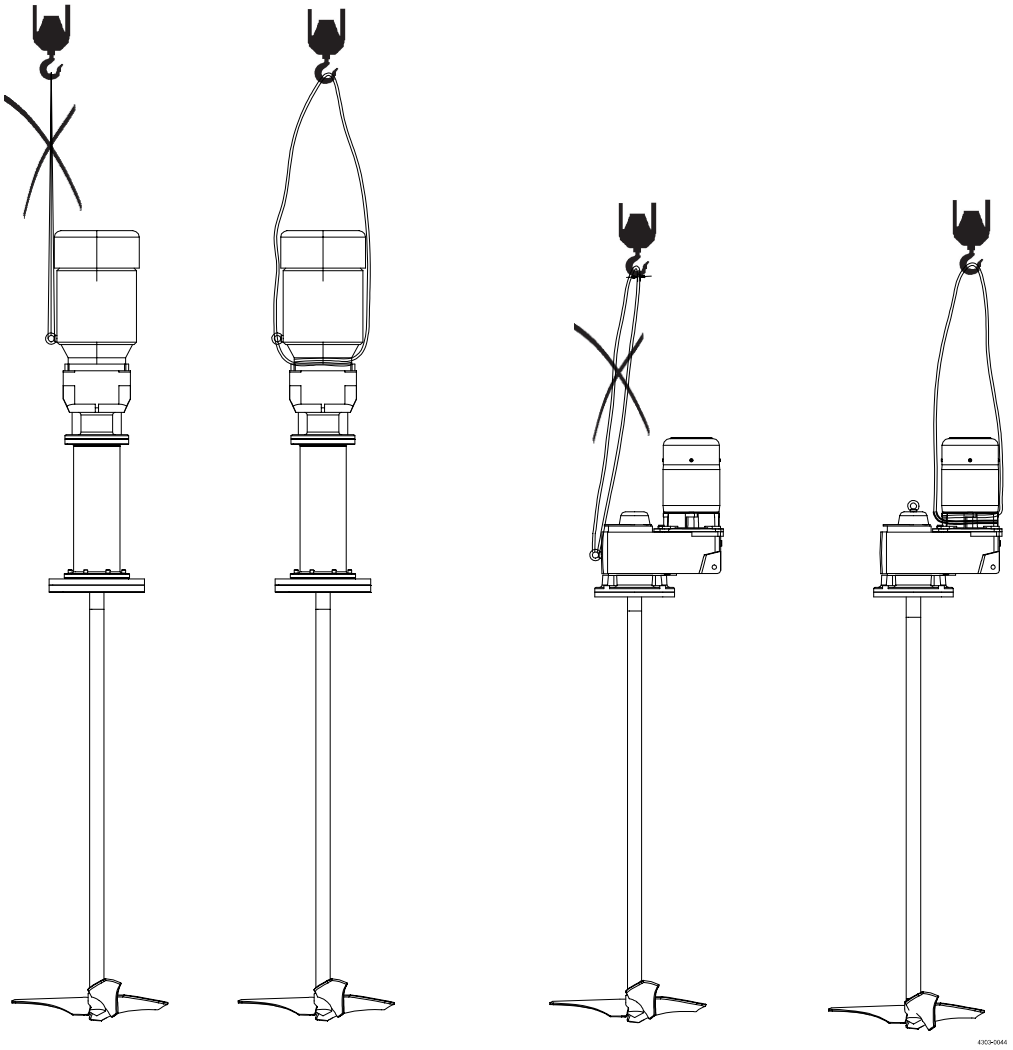

NOTE!
If possible, lift the Agitator in horizontal position, and in two points.

Step 4
During transportation

1. **Always** support the shaft adequately, to protect shaft and bearings.
2. **Never** expose the Agitator to undue vibrations or shocks.
3. Control for oil leakage on gears with vent screw.

Study the instructions carefully and pay special attention to the warnings!
Always check the Agitator before operation - see section 3.3 Pre-use check.
The Agitator is for permanent fastening.
Make sure that the motor correspond to the environment.

3.2 Installation

Always read the technical data thoroughly (see chapter 6.1 Technical data).
Only install this Agitator in mounting angle according to the name plate (see chapter 6.1 Technical data for illustration).
Always use lifting equipment when handling the Agitator (see Step 2).
Always have safety elements removed by authorized personnel.
Never cover or remove the nameplate.

Never connect to power supply during installation or service.
Always have the Agitator connected to power supply by authorized personnel.

NOTE!
Alfa Laval highly recommend to install motor protection guard to protect the motor from overloading.
Never install a none Alfa Laval shroud on the agitator as it can lead to overheat and a breakdown of the motor.
Alfa Laval highly recommends to use shaft retainer tool for installation of Agitator within a weight less than 500 kilogram and a shaft diameter between Ø30 and Ø60 (see section 7.5 Tools).

Welding flange - Flat Shaped Welding Flange (FSWF):

CAUTION!
Only authorized personnel to weld in flanges.
Alfa Laval cannot be held responsible for incorrect installation.

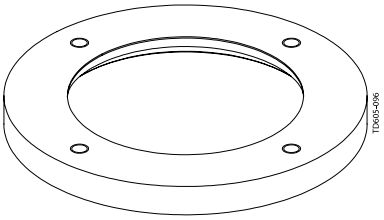

Step 1
Dismantle the FSWF if fitted onto the Agitator.

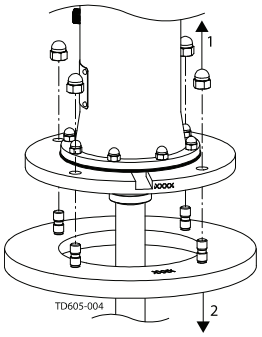

3 Installation

Study the instructions carefully and pay special attention to the warnings!
Always check the Agitator before operation - see section 3.3 Pre-use check.
The Agitator is for permanent fastening.
Make sure that the motor correspond to the environment.

Step 2
Ensure that the tank, where the welding flange are to be welded in, can handle the forces applied by the agitator: Torque Mv, Bending torque Mb and Side thrust Fs.

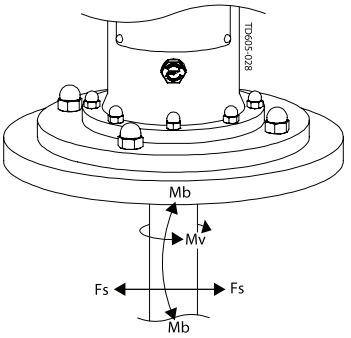

The values are depending on the Agitator configuration. The following information is required to calculate the forces:

P: Power of the motor in [kW]
n: Speed of Agitator shaft [RPM]
S: Shaft length according to Agitator type designation -Sxxxx- in [mm]
D: Largest impeller diameter according to Agitator designation -Pxxx- in [mm]

The values can be calculated as follows:

Type ALT / ALTB:
Mv [Nm] = 23873 x P / n
Fs [N] = 4.5 x Mv x 1000 / D

Type ALT:
Mb [Nm] = Fs x S / 1000

Type ALTB:
Mb [Nm] = Fs x S / 5333

Step 3
During the design phase of the tank, ensure sufficiently rigidity of the tank.
Ensure that the max. bending angle (A), at loads from Step 3 does not exceed according to below scheme

RPM:	<100	>100
A° (max bending angle at applied loads):	0.1	0.05

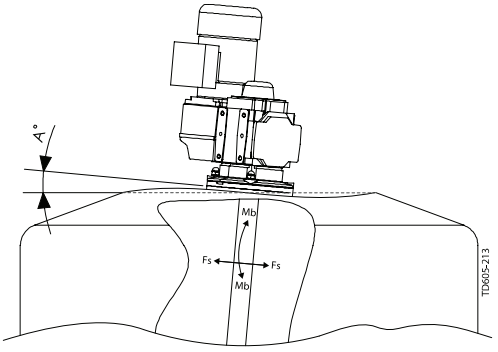

Study the instructions carefully and pay special attention to the warnings!
Always check the Agitator before operation - see section 3.3 Pre-use check.
The Agitator is for permanent fastening.
Make sure that the motor correspond to the environment.

Guidelines for cutting hole in tank for Flat Shaped Welding Flange (FSWF)

CAUTION!
Alfa Laval recommend that all other welding tasks on the tank are finished before cutting the hole for the flange.

Chamfer inner and outer hole edge 45°.

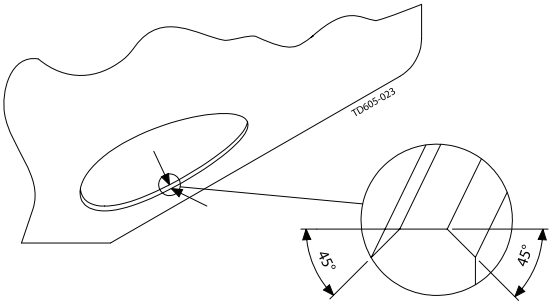

3 Installation

Study the instructions carefully and pay special attention to the warnings!
Always check the Agitator before operation - see section 3.3 Pre-use check.
The Agitator is for permanent fastening.
Make sure that the motor correspond to the environment.

Welding procedure, flange (FSWF) without nose:

Step 1
Always allow flange to cool to ambient temperature after each section has been welded
Position the flange correctly

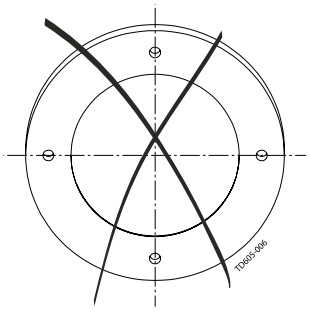

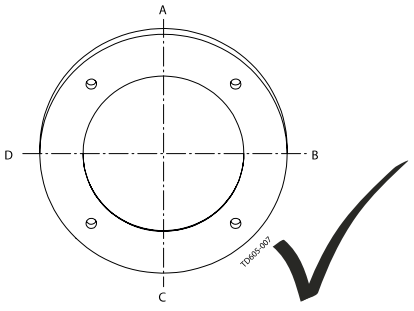

Step 2
Spot weld from outside.

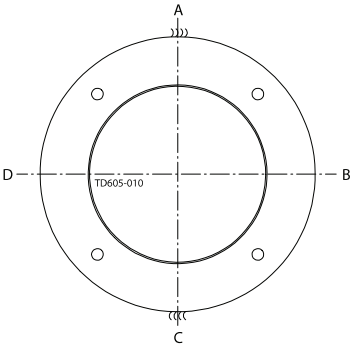

Adjust alignment!

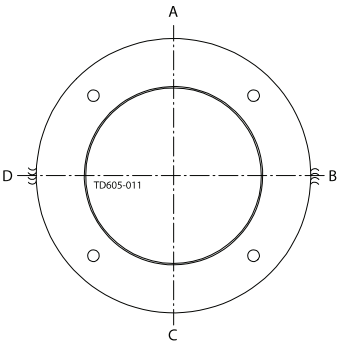

Step 3

Weld the following sections first from outside then from inside, and cool with air between each section.

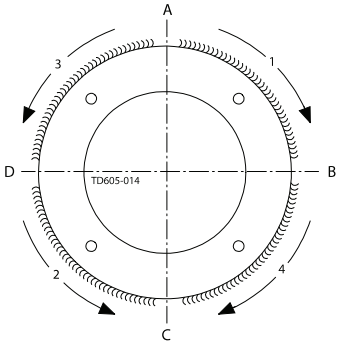

Step 4

Ensure that the surface flatness tolerance equals 0.25 after welding.
Grind and polish the welding flange.
Use a solid straight ruler and a feeler gauge to determine the flatness.

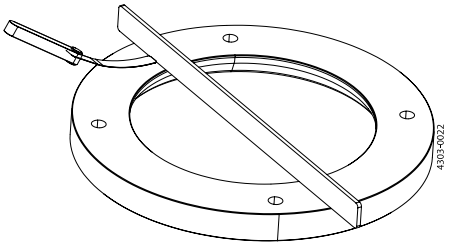

Study the instructions carefully and pay special attention to the warnings!
Always check the Agitator before operation - see section 3.3 Pre-use check.
The Agitator is for permanent fastening.
Make sure that the motor correspond to the environment.

Welding procedure, flange (FSWF) with nose:

NOTE!
Alfa Laval recommend a welding tool with, if possible, build in cooling by flowing water, to be made and fixed to the FSWF to ensure shape and form of the FSWF during welding and installation.

Step 1
Position the flange correctly.
Always allow flange to cool to ambient temperature after each section has been welded.

Step 2
Spot weld from outside.

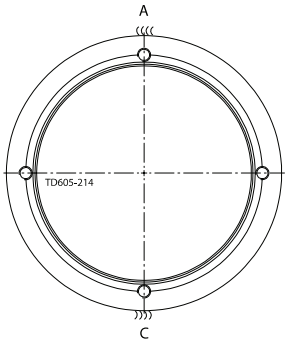

Adjust alignment!

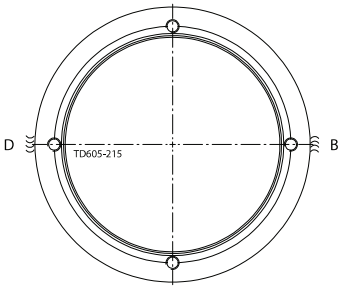

Step 3

Spot weld from inside

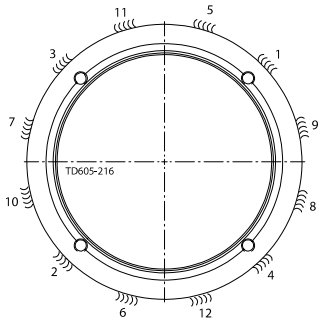

Step 4
Weld the following sections first from inside then from outside and cool to ambient temperature after each section has been welded

Step 1

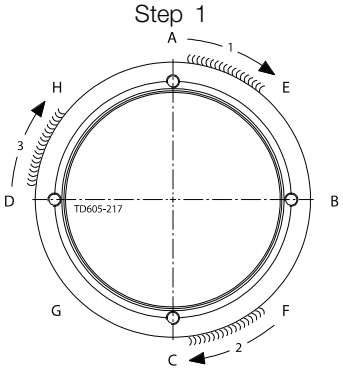

Cool with air!

Step 2

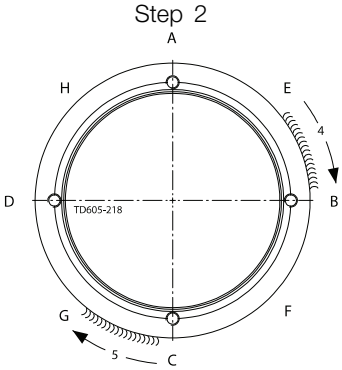

Cool with air!

Step 3

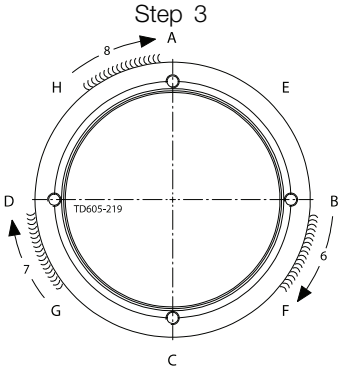

Cool with air!

Study the instructions carefully and pay special attention to the warnings!
Always check the Agitator before operation - see section 3.3 Pre-use check.
The Agitator is for permanent fastening.
Make sure that the motor correspond to the environment.

Step 5
Remove the welding tool.
Ensure that the surface flatness tolerance equals ±0.1mm.
Grind and polish the welding flange.

Study the instructions carefully and pay special attention to the warnings!
Always check the Agitator before operation - see section 3.3 Pre-use check.
The Agitator is for permanent fastening.
Make sure that the motor correspond to the environment.

Welding procedure for divided shaft with thread connection:

NOTE!
Only relevant for divided shafts prepared for welding.

Step 1
Ensure that shaft ends are screwed completely together.

Step 2
Spot weld and cool with air.

Step 3
All-weld shaft connections with one welding seam at a time, cool with air and continue with one welding until welding is according to illustration. Use welding procedures which introduce as less tension and bending to the shaft as possible.

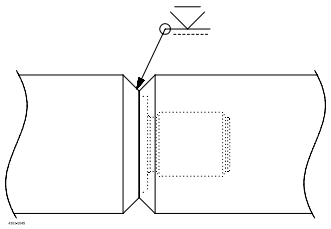

Step 4
If shaft sleeve is used weld as described in step 3.

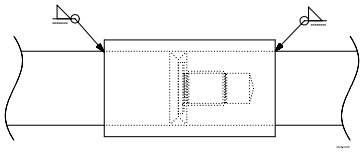

Step 5
Align the shaft, using heat and or bending forces according to specifications in section 6.5 Shaft alignment.

3 Installation

Study the instructions carefully and pay special attention to the warnings!
Always check the Agitator before operation - see section 3.3 Pre-use check.
The Agitator is for permanent fastening.
Make sure that the motor correspond to the environment.

Mounting Agitator:

CAUTION!
Always ensure that mounting is carried out according to description shown in section 6.2 Mounting angle for top mounting agitator type ALT.
Always refer to tightening torques in section 6.4 Tightening torques for bolt connections when tightening bolts.

Step 1
Place impeller device(s) in the tank.
Ensure that tank and Agitator surfaces are clean.
Ensure that drain (I) is pointing downwards.
For gears with vent screw, ensure the vent is pointing upwards and the rubber plug (III) is removed (see section 8.1 Drive unit instructions).

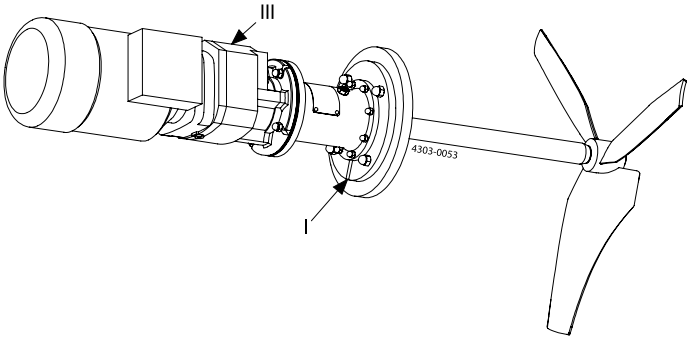

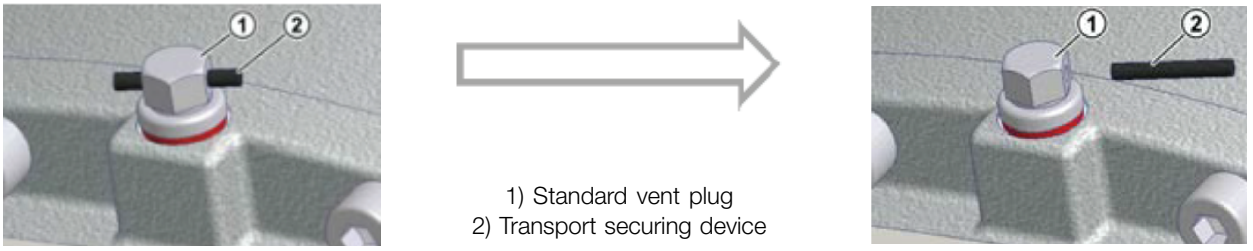

1) Standard vent plug
2) Transport securing device

Step 2
Mount the Agitator onto the tank.

NOTE!
Alfa Laval recommends using shaft retainer tool during mounting and dismantling (see section 7.5 Tools).

Study the instructions carefully and pay special attention to the warnings!
Always check the Agitator before operation - see section 3.3 Pre-use check.
The Agitator is for permanent fastening.
Make sure that the motor correspond to the environment.

Step 3
Mount impeller device(s) onto shaft.

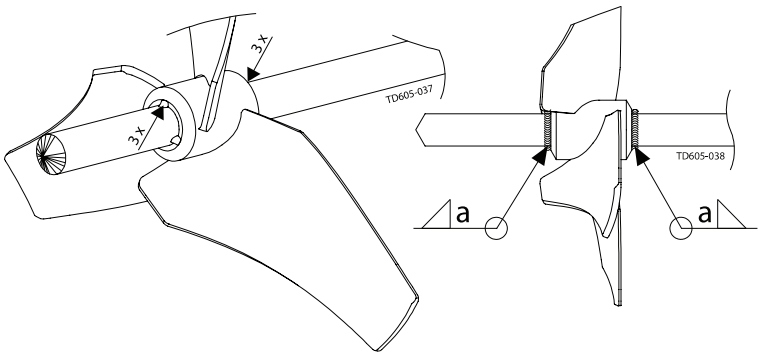

Hub diameter [mm]	a - dimension [mm]
Ø30	1,1
Ø40	1,8
Ø55, Ø80, Ø120	2,8

All-weld propeller to shaft with one welding seam at a time, cool with air and continue with one welding until welding is according to illustration. Use welding procedures which introduce as less heat, tension and bending to the shaft as possible.

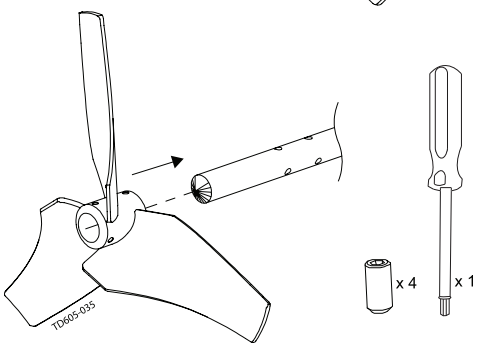

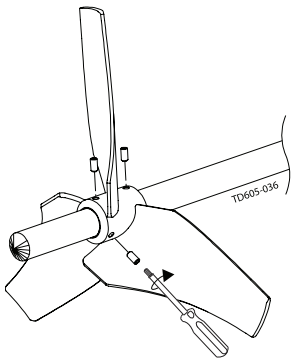

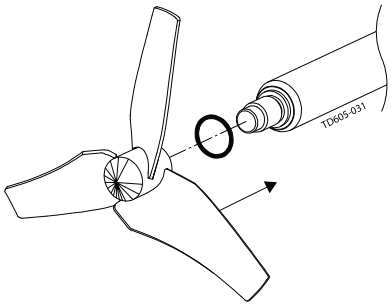

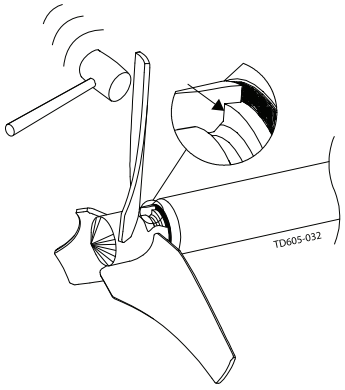

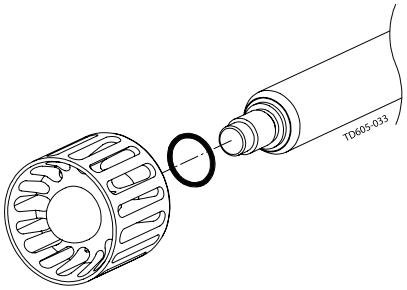

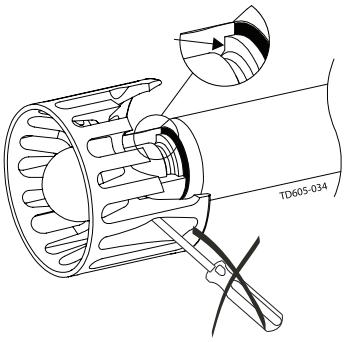

Step 4
Ensure the impeller device orientation is correct according to the direction of the desired flow. The direction is determined by the letter "D" or "U" in the last part of the agitator type description. E.g. -E400D3P has the letter "D" which means the flow direction is away from the drive unit. -E400U3P has the letter "U" which means the flow direction is towards the drive unit.

3 Installation

Study the instructions carefully and pay special attention to the warnings!
Always check the Agitator before operation - see section 3.3 Pre-use check.
The Agitator is for permanent fastening.
Make sure that the motor correspond to the environment.

Step 5

Ensure the impeller is positioned, keeping minimum radial distance to the tank.

Further installation requirements regarding the position can be found in 6.2 Mounting angle for top mounting agitator type ALT and to ensure optimum performance.

Clearence > S/15xsin(V)

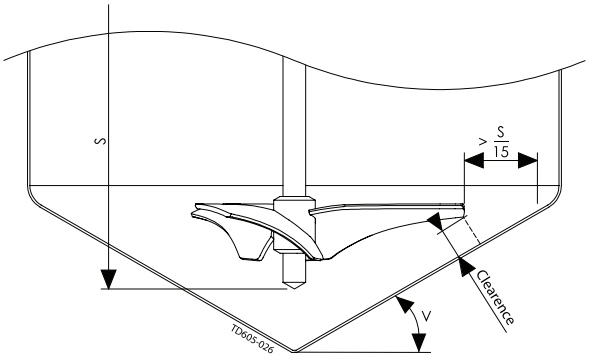

NOTE!
In special cases clearence can be reduce to 20mm+actual deflection, please advice with Alfa Laval.

Step 6
Align the shaft, using heat and or bending forces according to specifications and instructions in section 6.5 Shaft alignment.

Step 7
NOTE! Only relevant when shaft is divided with a threaded coupling.

Ensure that the two screws are screwed in tightly. Maximum torque 11Nm.

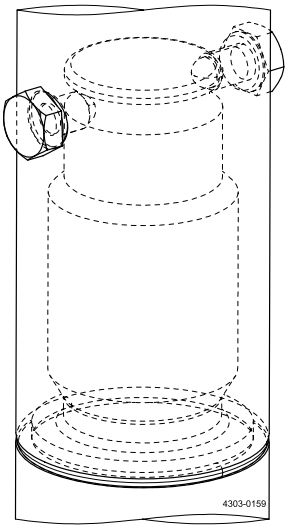

WARNING!
Do **NOT** connect the power supply until installation is completed.

CAUTION!
Follow instructions in section 8.1 Drive unit instructions
Ensure that the rotation direction is according to nameplate.
Always perform pre-use check before operation (see section 3.3 Pre-use check).

Note!
On closed tanks, Alfa Laval recommends installing a manhole circuit breaker, cutting power supply if hatch is open.

Study the instructions carefully and pay special attention to the warnings! Always check the Agitator before operation.
The Agitator is only designed to operate according to data given in section 2.3 Intended use, 6.2 Mounting angle for top mounting agitator type ALT. Check the rotation direction before operation.

3.3 Pre-use check

Always make sure that the ATEX category stated on the Agitator name plate corresponds with the environment it is installed in.
Never install the Agitator in environments which deviate from those given in section 2.3 Intended use and 6.1 Technical data.
Always ensure that all alignment specifications given in section 6.5 Shaft alignment are followed.
Always make sure that the motor corresponds to the environment.

Step 1
Go through section 2.4 Safety precautions.

Step 2
Check the fastenings.

Step 3
Check o-ring and impeller are correctly fitted.

Step 4
Check impellers CANNOT collide with tank vessel at any point during a full rotation.

Clearence > S/15*sin(V)

NOTE!
In special cases Clearence can be reduced to 20mm+actual deflection, please advise with Alfa Laval.

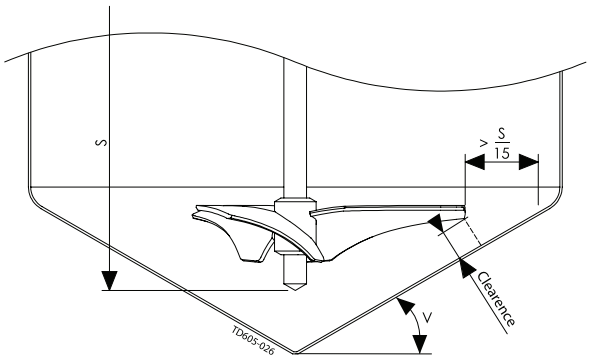

Step 5
Ensure that drain (I) is pointing downwards.
For gears with vent screw, ensure the vent is pointing upwards and the rubber plug (III) is removed (see section 8.1 Drive unit instructions and mounting instructions in section 3.2 Installation).
Position (II) refers to power cord entry location.

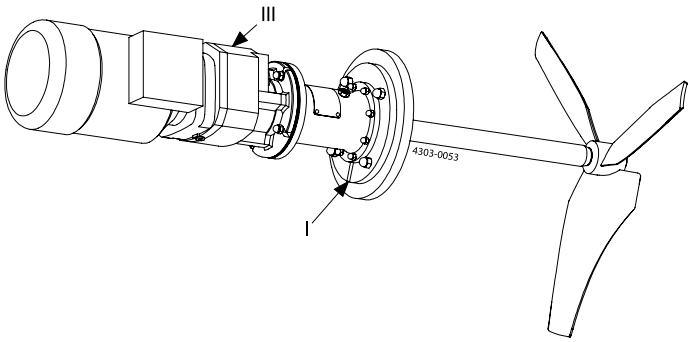

3 Installation

Study the instructions carefully and pay special attention to the warnings! Always check the Agitator before operation.
The Agitator is only designed to operate according to data given in section 2.3 Intended use, 6.2 Mounting angle for top mounting agitator type ALT. Check the rotation direction before operation.

Step 6
Ensure that the rotation direction is according to nameplate, before starting the Agitator.

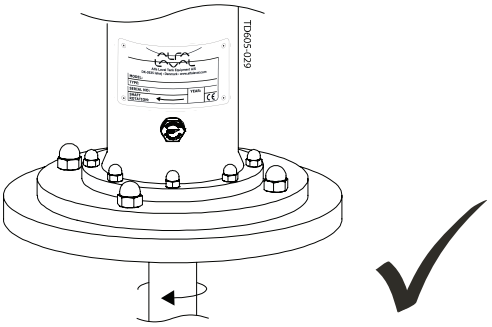

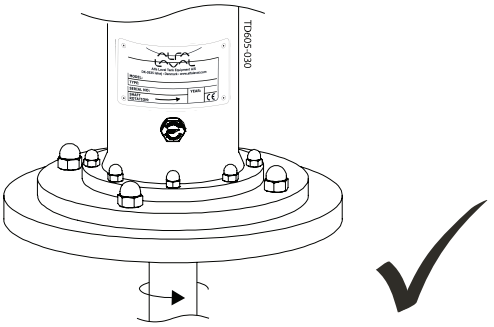

Step 7
If frequency converter drive is used the speed must be monitored according to section 6.7 Use of frequency converter drive (VLT). It must be ensured NOT to operate continuously within +/- 20% of critical oscillation speed.
(The critical oscillation speed can be found in the supplied Alfa Laval quotation agreement. In any doubt please advise with Alfa Laval).

Step 8
Check forces FR2, FA2 and XR2 applied to the gear box are higher or equal to the value listed in the supplied ATEX addendum.

NOTE!
Please pay special attention to the stated maintenance interval (MI) of the gear box.
The gear can have a shorter live time than the agitator.

The axial force FA2 is depended on the density of the media and must therefore not be higher than the density stated in the ATEX addendum.

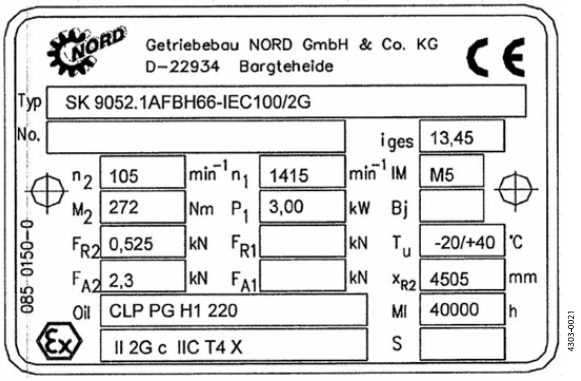

If frequency converter drive is used please pay special attention to the maximum motor speed n1 stated on the gear box.

3.4 Recycling information

- **Unpacking**

- Packing material consists of wood, plastics, cardboard boxes and in some cases metal straps.
- Wood and cardboard boxes can be re-used, recycled or used for energy recovery.
- Plastics should be recycled or burnt at a licensed waste incineration plant.
- Metal straps should be sent for material recycling.

- **Maintenance**

- During maintenance, oil and wear parts in the machine are replaced.
- All metal parts should be sent for material recycling.
- Worn out or defective electronic parts should be sent to a licensed handler for material recycling.
- Oil and all non-metal wear parts must be disposed of in accordance with local regulations.

- **Scrapping**

- At the end of use, the equipment must be recycled according to the relevant, local regulations. Besides the equipment itself, any hazardous residues from the process liquid must be considered and dealt with in a proper manner. When in doubt, or in the absence of local regulations, please contact your local Alfa Laval sales company.

Study the instructions carefully and pay special attention to warnings! ***Always*** *check the Agitator before operation (see section 3.3 Pre-use check). Alfa Laval recommend a soft starter or a frequency converter for the Agitator to reduce the load on tank and Agitator. For operation instructions from suppliers (see chapter 8 Appendix).*

4.1 Operation/Control

If deviation from normal operation and intended use shown in section 2.3 Intended use, immediately switch off the Agitator and find the cause of failure (see section 4.2 Troubleshooting).
The Agitator is designed to max 5 starts per hour.
The Agitator is normally constructed for use with the lower impeller adequately submerged in the liquid. However, the Agitator can be dimensioned for use while emptying the tank completely (see section 2.3 Intended use).

Inspect the Agitator regularly

	Inspect / Clean / Lubricate			
	Supplier instruction	Weekly	Monthly	Half-yearly
Drive unit				
Motor	x			
- Clean surfaces - to avoid overheating		x		
Gear	x			
- Clean vent screw (if any)		x		
- Check for oil leakage		x		
- Check temperature sticker		x		
Flange				
Clean drain			x	
Sealing				
Mechanical seal				
- NOT flushed: S			x	
Impeller device				
Sticky media				
- Clean impeller device			x	
Abrasive media				
- Check blade thickness*			x	
Check fastening of pointed set screws			x	
Bearing				
- Check bearing aligment (Only when Zone 0 or 20)		x		

** If any suspicion of reduction in blade thickness, contact Alfa Laval and inform serial no stated on the name plate.*

4 Operation

Study the instructions carefully and pay special attention to warnings! ***Always*** *check the Agitator before operation (see section 3.3 Pre-use check). Alfa Laval recommend a soft starter or a frequency converter for the Agitator to reduce the load on tank and Agitator. For operation instructions from suppliers (see chapter 8 Appendix).*

4.2 Troubleshooting

Problem	Cause/result	Remedy
Not starting		
Drive unit	- Defect - Fault at power supply	Dismantle drive unit, check for correct rotation. Replace drive unit Check power supply connection Check voltage and frequency correspond with name plate Check frequency converter adjustment correspond to name plate
Agitator	- Obstructed	Check Agitator can rotate freely without stricking anything
Vibrations		
Impeller device	- Damaged - Unbalanced impeller - Damage to shaft seal	Contact Alfa Laval Clean impeller device Replace sealing
Shaft	- Damaged	Contact Alfa Laval
Other	- Deviation from normal operation - Increased / decreased temperature	Operation circumstances must equal to those it was designed for [1)]
Unusual noise		
Drive unit	- Defect - Bearing gap - Increased / decreased power - No grease	Replace drive unit Renovate or change the drive unit immediately Switch of power supply Replace drive unit
Sealing	- Wear sealing - Seal are not flushed [2)] - Seal surfaces stick together	Replace sealing Replace sealing and ensure that the seal never run dry [2)] Separate surfaces carefully and clean them - ensure that seals are sufficient cleaned before still stand
Other	- Deviation from normal operation - Circuit overload	Operation circumstances must be equal to those it was designed for [1)] Operation cirucmstances must be equal to those it was designed for [1)]
Leakage		
Gear	- Oil leakage	Renovate or change the gear immediately
Sealing	- CIP fluid or other	Replace sealing
Continuously breakdown		
Drive unit	- Defect - Too high frequency	Replace motor Regulate frequency down
Other	- Deviation from normal operation	Operation cirucmstances must be equal to those it was designed for [1)]
Performance		
Drive unit Agitator Other	- Wrong frequency - Reverse direction - Deviation from normal operation	Check frequency connection Inspect the Agitator carefully Operation cirucmstances must be equal to those it was designed for [1)]

[1)] See section 2.3 Intended use.
[2)] Type S and S3 are designed for dry running.

Study the instructions carefully and pay special attention to warnings! ***Always*** *check the Agitator before operation (see section 3.3 Pre-use check). Alfa Laval recommend a soft starter or a frequency converter for the Agitator to reduce the load on tank and Agitator. For operation instructions from suppliers (see chapter 8 Appendix).*

4.3 Cleaning - recommendations

Ensure the drain in flange is not clogged up, by cleaning drain regularly.

Ensure that all surfaces in contact with product are totally clean in order not to contaminate the product.
Pay special attention to:
- Impeller device surfaces
- Surfaces between impeller devices and shaft
- Surfaces around sealing
- Surfaces around weldings

CAUTION!
Mechanical seals are designed for cleaning in place (CIP) and sterilising in place (SIP).
CIP = Cleaning In Place. SIP = Sterilising In Place.

Always rinse well with clean water after cleaning.

Ensure that the mechanical seal are regular cleaned for dust as described in section 6.3 Specific conditions for safe use.

Ensure that the clearance between the support bearing and the shaft are regular cleaned for dust to prevent unnecessary action on the support bearing as described in section 6.6 Support bearing alignment.

4.4 Temperature limits

The media temperature can be reduced depending on the operating condition and must not exceed the limits described in section 6.3 Specific conditions for safe use.
The highest allowable ambient temperature is 40°C.

5 Maintenance

For maintenance instructions from suppliers, see chapter 8 Appendix. ***Always*** *ensure that mounting is according to chapter 6.1 Technical data. Ensure totally clean surfaces during mounting - also remove remaining loctite residue on threads.* ***Always*** *refer to tightening torques in section 6.4 Tightening torques for bolt connections.*

5.1 General Maintenance

Maintenance of the Agitator should only be performed by authorized personnel.
For maintenance instructions from suppliers, see chapter 8 Appendix.
Ensure totally clean surfaces during maintenance.

Ensure nonexplosive atmosphere during maintenance.

If possible, **always** dismount the Agitator from tank before dismantling it.
Otherwise it is recommended to purchase a shaft retainer tool (see section 7.5 Tools).
For lifting instruction, please refer to chapter 3 Installation.

Always read the technical data thoroughly (see chapter 6.1 Technical data).
Always ensure that the mounting is according to agitator described in section 2.3 Intended use and chapter 6.1 Technical data.
Always refer to tightening torques in section 6.4 Tightening torques for bolt connections.
Always disconnect the power supply when servicing the Agitator.
Always use proper tools.
Always replace sealing elements before reassembling.

WARNING!
Follow the dismantling and assembly instructions to the letter.
After maintenance, section 3.3 Pre-use check must be read thoroughly before operation.

NOTE!
All scrap must be stored/disposed of in accordance with current rules/directives.
Use original Alfa Laval spare parts.

	Replace every:				
	500 hour or yearly	1000 hour or yearly	3000 hour or yearly	3000 hour or every 3rd year	6000 hour or every 3rd year
Sealing					
Mechanical seal					
-NOT flushed: **S**				x	
Drive unit					
Gear box	According to gear box name plate				

For maintenance instructions from suppliers, see chapter 8 Appendix. ***Always*** *ensure that mounting is according to chapter 6.1 Technical data. Ensure totally clean surfaces during mounting - also remove remaining loctite residue on threads.* ***Always*** *refer to tightening torques in section 6.4 Tightening torques for bolt connections.*

5.2 Replacement of drive unit

Step 1
1. Dismantle Agitator from welding flange.
2. Lift up Agitator.

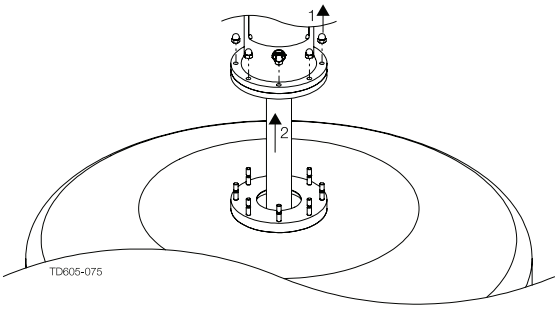

Step 2
Support shaft using shaft retainer tool.

NOTE!
Alfa Laval highly recommends to use shaft retainer tool for installation of Agitator within a weight less than 500 kilograms and a shaft diameter between Ø30 and Ø60 (see section 7.5 Tools).

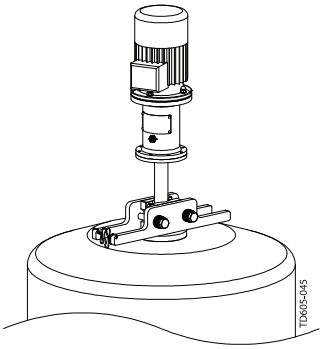

Step 3
Before dismantling drive unit, please see instructions in 5.3 Replacement of shaft seal, type S (and type S with dust trap).

Step 4
Loosen cap nuts.
CAUTION!
If dismantling motor from gear:
Follow supplier instructions
Ensure that the gear oil is contained
A cog wheel may be mounted onto the motor shaft.

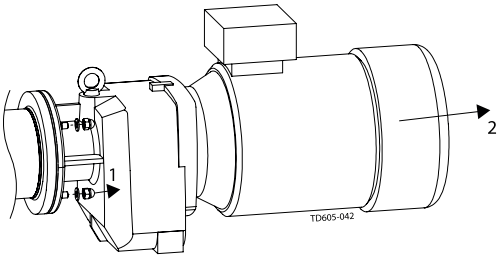

Step 5
Release the gear motor from the Agitator. Refer to supplier instructions.

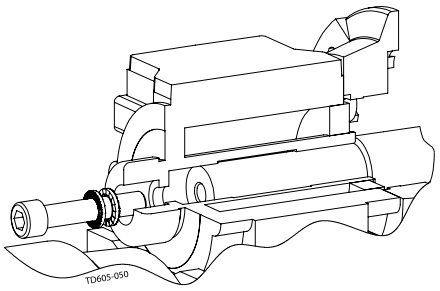

For maintenance instructions from suppliers, see chapter 8 Appendix. ***Always*** *ensure that mounting is according to chapter 6.1 Technical data. Ensure totally clean surfaces during mounting - also remove remaining loctite residue on threads.* ***Always*** *refer to tightening torques in section 6.4 Tightening torques for bolt connections.*

Step 6
Lift up the drive unit and pull it away.

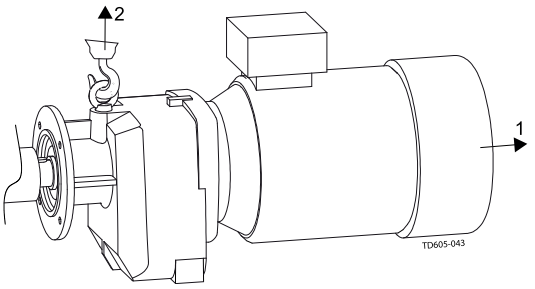

Step 7
Replacement drive unit.

Step 8
Use Loctite® 243 before fastening screws.
Always refer to tightening torques in section 6.4 Tightening torques for bolt connections.

Step 9
Mount drive unit reverse as dismantling.

For maintenance instructions from suppliers, see chapter 8 Appendix. ***Always*** *ensure that mounting is according to chapter 6.1 Technical data. Ensure totally clean surfaces during mounting - also remove remaining loctite residue on threads.* ***Always*** *refer to tightening torques in section 6.4 Tightening torques for bolt connections.*

5.3 Replacement of shaft seal, type S (and type S with dust trap)

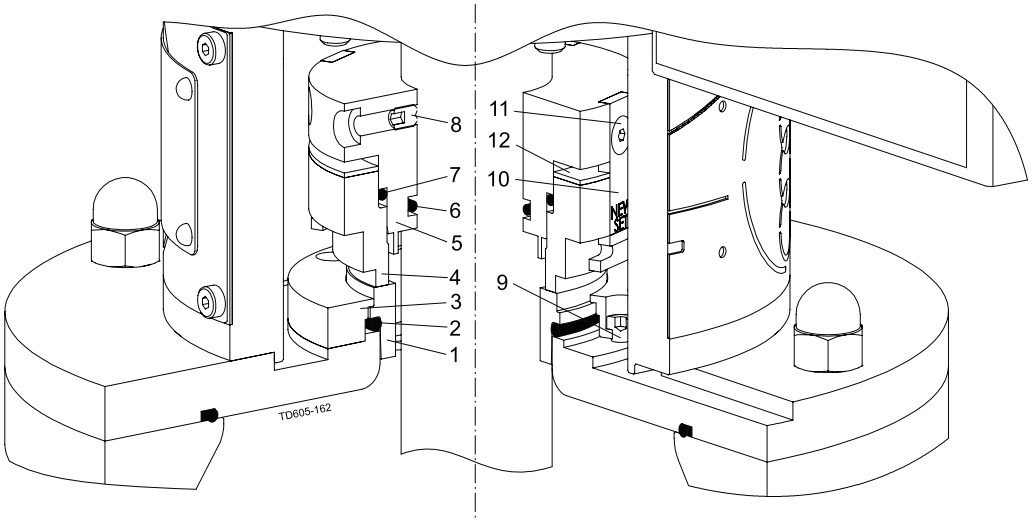

NOTE!
To replace seals easier, use detergent.
Ensure subsequent to seal replacement, that all seal faces are totally clean, using alcohol.

NOTE!
Seal is designed for dry running, so a whining noise during operation is quite normal.

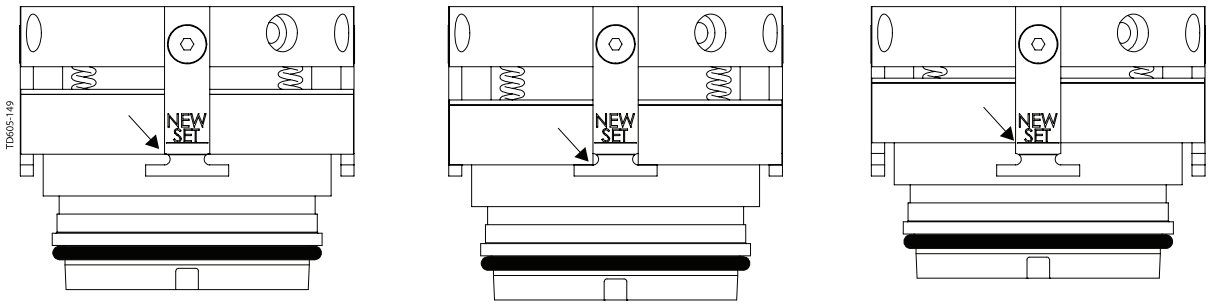

Change seal! Disassembled seal New seal after mounting

NOTE!
If possible, **always** dismantle the Agitator from the tank before dismounting any parts

Step 1
1. Dismantle Agitator from welding flange.
2. Lift up Agitator.

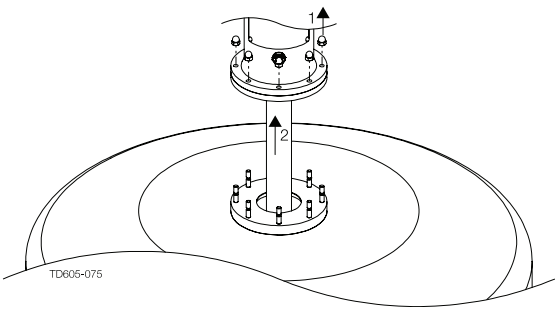

For maintenance instructions from suppliers, see chapter 8 Appendix. ***Always*** *ensure that mounting is according to chapter 6.1 Technical data. Ensure totally clean surfaces during mounting - also remove remaining loctite residue on threads.* ***Always*** *refer to tightening torques in section 6.4 Tightening torques for bolt connections.*

Step 2
Support shaft using shaft retainer tool.

NOTE!
Alfa Laval highly recommends to use shaft retainer tool for installation of Agitator within a weight less than 500 kilogram and a shaft diameter between Ø30 and Ø60 (see section 7.5 Tools).

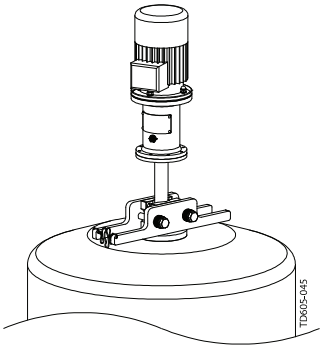

Step 3
1. Remove guards from lantern.
2. Loosen screws, securing the rotating seal part onto the shaft.
3. Move the rotating seal part carefully along the shaft.

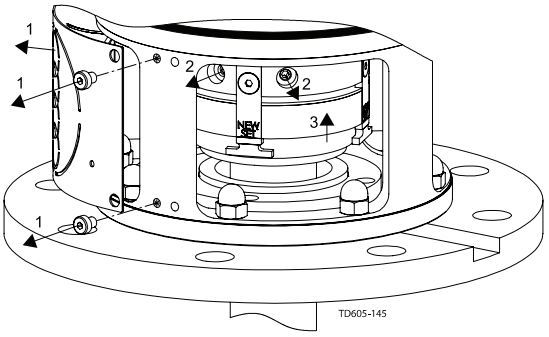

Step 4
1. Remove cap nuts.
2. Move the mounting flange, including stationary seal part, by pulling it carefully along the shaft, avoiding contact.

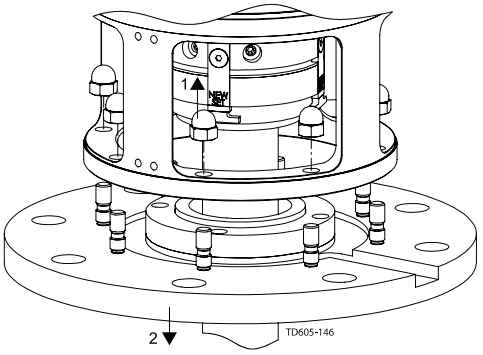

Step 5
1. Remove screws.
2. Move retainer ring.
3. Move stationary seal part and o-ring from mounting flange.

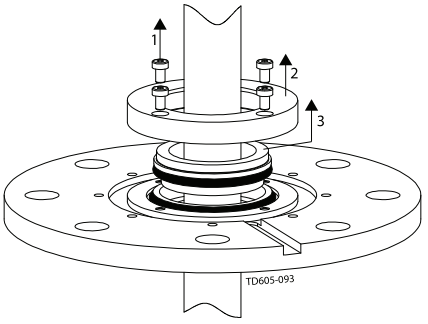

Step 6
If necessary, dismantle drive unit as described in section 5.2 Replacement of drive unit.

For maintenance instructions from suppliers, see chapter 8 Appendix. ***Always*** *ensure that mounting is according to chapter 6.1 Technical data. Ensure totally clean surfaces during mounting - also remove remaining loctite residue on threads.* ***Always*** *refer to tightening torques in section 6.4 Tightening torques for bolt connections.*

Step 7
Remove oil trap ring, if any.

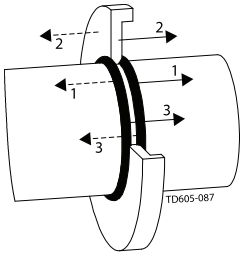

Step 8
Remove rotary seal part, by pulling it carefully along the shaft.

Step 9
1. Replace all seal parts and o-rings.
2. Assemble the new rotary seal part on the shaft, by using plenty of detergent.

Step 10
Assemble oil trap ring, if any.

Step 11
CAUTION!
Assemble the stationary seal into the mounting flange by following instructions to the letter.
1. Ensure that pins fit onto the groove in the seal.
2. Carefully press down the stationary seal part and retainer ring into the mounting flange.
3. Use first: DIN7984 or DIN912 M5x12 screws during assembly and afterwards: DIN7984 M5x10, DIN7984 or DIN912 M5x10 screws during assembly – The procedure is used to ensure that the retainer ring is ALWAYS parallel to the mounting flange
4. Remove the M5x10 screws and assemble with original fitted screws.

Step 12
Assemble mounting flange, shaft and drive unit, following the reverse procedure of dismantling.

Step 13
Move the rotating seal part towards the stationary seal part.

1. Tighten the screws securing the seal onto the shaft.

CAUTION!
The new seal must be adjusted to the “NEW SET” line.

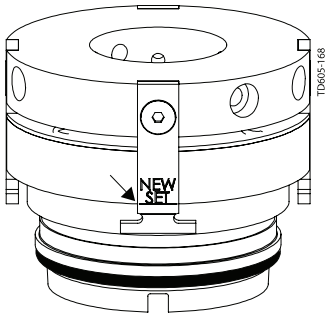

6 Technical data

All dimenstions in mm unless otherwise stated.

6.1 Technical data

The Alfa Laval agitator is available in various configurations and is configured to solve the specific application. Therefore specific information like weight, size, critical oscillation speed and duties can be found in the supplied Alfa Laval quotation agreement.

Important installation information about weight and mounting angle can be found on the supplied agitator name plate as shown on the illustration.

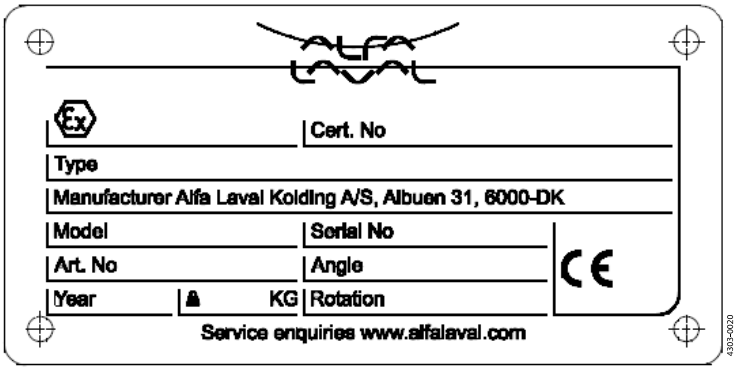

All dimenstions in mm unless otherwise stated.

6.2 Mounting angle for top mounting agitator type ALT

To ensure optimal agitation the top mounted agitator must be installed in the mounting angle specified on the name plate as shown on the illustration and in the off center position required from the Alfa Laval quotation agreement.

S: is the length of the agitator shaft including the impeller.

Y-dim: is the distance from the welding flange face surface and to the tank bottom where the center line of the agitator intersects with the tank bottom line.

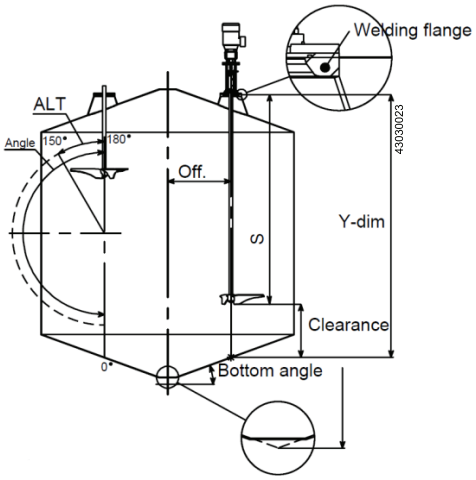

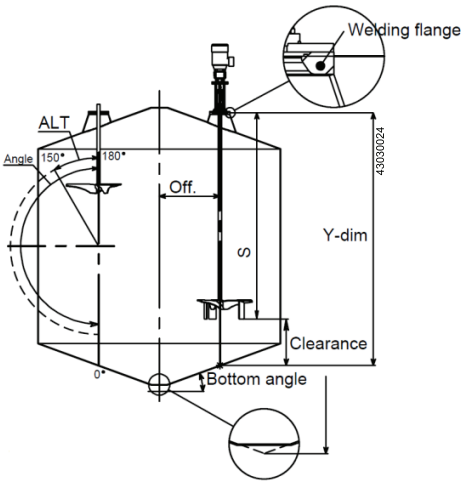

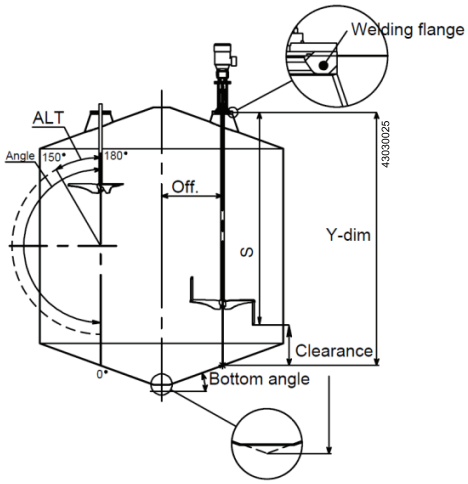

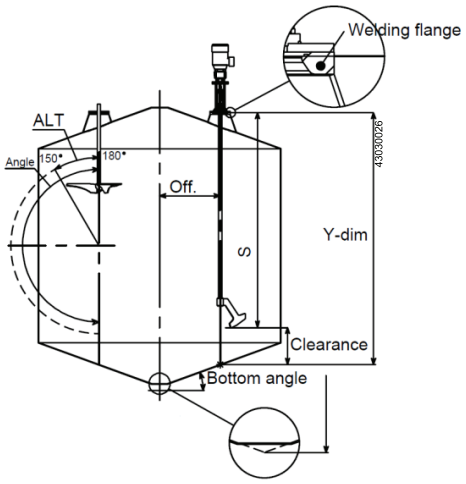

All dimenstions in mm unless otherwise stated.

6.3 Specific conditions for safe use

- The mechanical shaft seal operating limits is pressure and temperature depended according to below table and must not be exceeded.

Table 1. Maximum speed for marking: II 1/2G Ex h IIB T4 Ga/Gb and II 1/2D Ex h IIIB T135°C Da/Db

	0,5		6,0				Pressure max. [Barg]
Øshaft	80	90	45	60	80	90	Media temp. max. [°C]
Ø30	420	350	300	200	150	125	Max. speed [rpm]
Ø40	420	350	300	200	150	125	
Ø50	300	250	240	160	120	100	
Ø60	300	250	240	160	120	100	
Ø70	240	200	180	120	90	75	
Ø80	240	200	180	120	90	75	
Ø90	195	165	150	100	75	60	

Table 2. Maximum speed for marking: II 2G Ex h IIB T4 Gb and II 2D Ex h IIIB T135°C Db

	0,5		6,0		Pressure max. [Barg]
Øshaft	80	90	80	90	Media temp. max. [°C]
Ø30	560	490	300	250	Max. speed [rpm]
Ø40	560	490	300	250	
Ø50	400	350	240	200	
Ø60	400	350	240	200	
Ø70	320	280	180	150	
Ø80	320	280	180	150	
Ø90	260	225	150	125	

All dimenstions in mm unless otherwise stated.

NOTE
Regular cleaning of the mechanical seal is required when a dust atmosphere is present.
It must be ensured that the seal face pos. 4 can move freely to ensure correct alignment between the seal faces (pos. 4 and pos. 1).
High dust accumulation on the thrust ring pos. 12 can prevent the seal face pos. 4 to move freely which then can lead to an ignition source. Regular cleaning with pressurized air or vacuum must therefore be ensured. The interval of cleaning is depended on the operating environment and must be tested and defined by the user before commissioning.

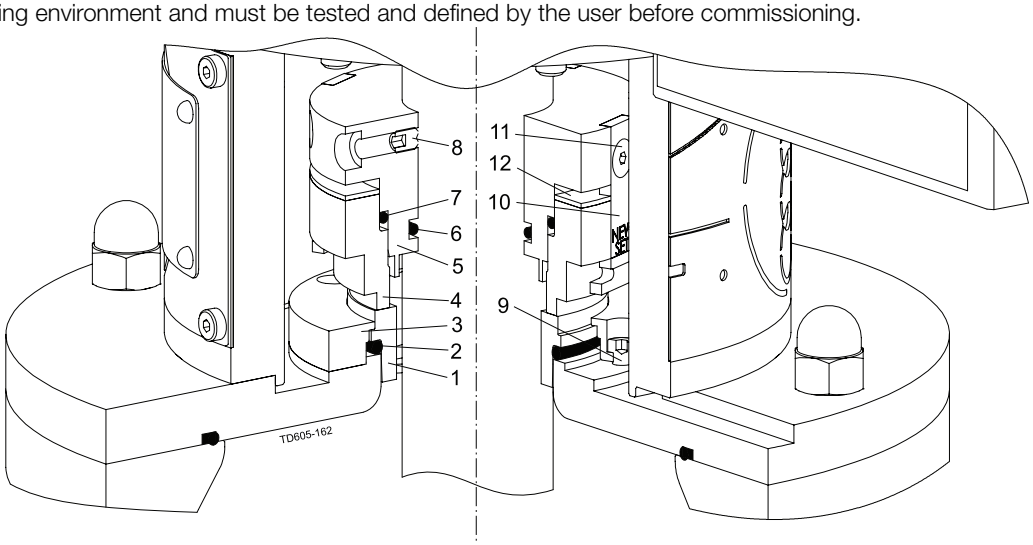

The gear box ATEX validation is depended on the forces applied to it and must therefore have values for FR2, FA2 and XR2 stated on the gear box name plate that are higher or equal to the values from the supplied ATEX addendum. See picture example of the gear box name plate below.

NOTE
The axial force FA2 is depended on the density of the media and must therefore not be higher than the density stated in the ATEX addendum.

The position of the impellers (S1-S10) have great impact on the critical oscillation speed and must therefore be according to the supplied ATEX addendum.

If the lowest impeller is mounted with a threaded hub the maximum distance to the tank bottom Hmax from the ATEX addendum must not be exceeded. If Hmax = N/A then the impeller must be welded to the shaft or mounted with 4 pointed set screws. This is to ensure the single impact energy level don't reach a level of 10J where a potential ignition source can become effective.

Operating with variable speed please pay special attention to section 6.7 Use of frequency converter drive (VLT).

All dimenstions in mm unless otherwise stated.

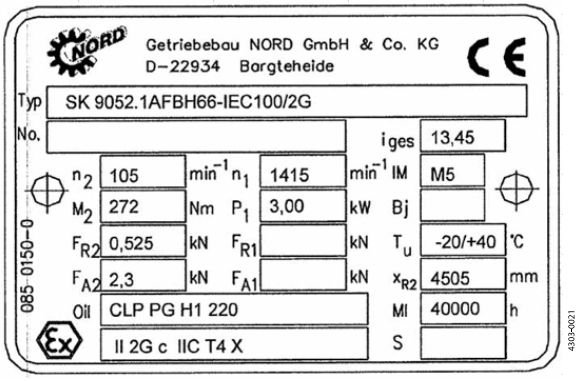

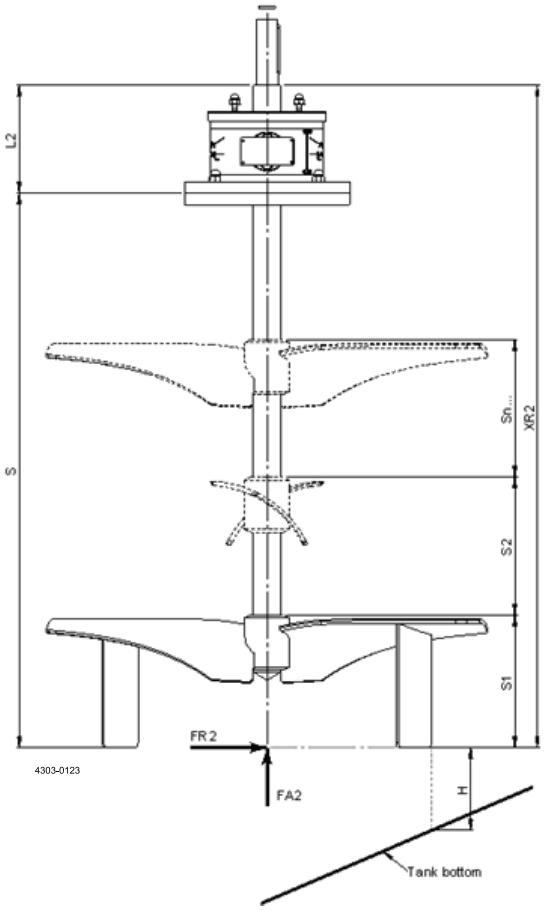

All dimenstions in mm unless otherwise stated.

6.4 Tightening torques for bolt connections

CAUTION!
Use Loctite® before fastening.
Do NOT use air powered tools.

M4	M5	M6	M8	M10	M12	M14	M16	M18	M20	M22	M24
3Nm	6Nm	11Nm	26Nm	51Nm	88Nm	141Nm	218Nm	308Nm	439Nm	582Nm	724Nm

6.5 Shaft alignment

Shaft to be aligned in bearing frame or in gear motor.

RPM up to:	50	100	500	1000	2800
U (max radial tolerance, ALT)	0.4	0.3	0.2	0.1	0.05
U (max radial tolerance, ALTB)	2.0	1.5	1.0		

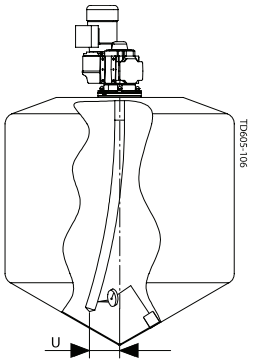

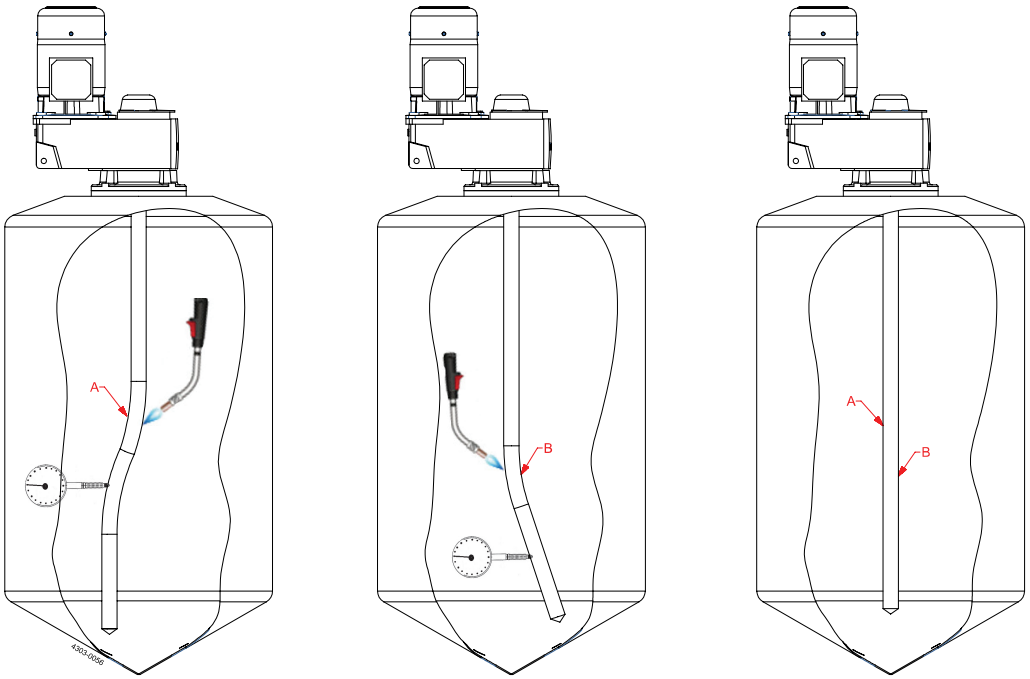

All dimenstions in mm unless otherwise stated.

After propellers has been welded onto the shaft and / or two shaft parts has been welded together - the shaft must be aligned. If the shafts has been welded according to Alfa Lavals recommendations shown below – the required alignment will be very little as the amount of introduced heat to the shaft is minimized and due to the fact that all shafts has been aligned before delivery from Alfa Laval.

"All-weld shaft connections and propellers to shaft with one welding seam at a time, cool with air and continue with one welding until welding is according to illustration. Use welding procedures which introduce as less heat, tension and bending to the shaft as possible."

Required tool:
1. A gas-welding torch supplied with a mixture of Acetylene and Oxygen gas.
2. A dial indicator.

Procedure:
1. Alignment of the shaft is carried out in steps from the bearing frame / gear motor and down to the shaft end.
2. If the shaft has been exposed to uneven heat around "A" (due to welding of shaft connection or welding of propeller onto shaft) a possible bend can be introduced around "A".
3. The dial indicator is located about 500-2000 mm below "A" (but above the next bend "B") and the shaft is rotated until the shaft is pointing to the left as shown on the picture.
4. The welding torch is used on the opposite site of the bend (the right side of the shaft in this example) about 25-50 mm further up or down from the welding area "A". The welding torch is positioned very near the shaft surface without moving it and the surface of the shaft is rapidly heated up (1-10 seconds depending on shaft bend) until a Ø2-10 mm red spot is observed. Observing the dial indicator the shaft will, during the heating process, bend even more to the wrong direction but during cooling it bends back to a "more" align position.
5. The shaft is cooled down with compressed air until the temperature of the part of the shaft around A is the same as the rest of the shaft and the surrounding temperature (2-10 minutes depending on amount of heat introduced).
6. Step 3), 4) and 5) are repeated until the alignment is according the specified "U" (which is a function of speed and agitator type).
7. The next position "B" where the shaft has been exposed to uneven heat is located (due to welding of shaft connection or welding of propeller onto shaft).
8. The dial indicator is located 500-2000 mm below "B" (but above the next bend) or at the shaft end if the shaft does not have any other bends and the shaft is rotated until the shaft is pointing to the right as shown on the picture.
9. The welding torch is used on the opposite site of the bend (the left side of the shaft in this example) about 25-50 mm further up or down from the welding area. The welding torch is positioned very near shaft surface without moving it and the surface of the shaft is rapidly heated up (1-10 seconds depending on shaft bend) until a Ø2-10 mm red spot is observed.
10. The shaft is cooled down with compressed air until the temperature of the part of the shaft around A is the same as the rest of the shaft and the surrounding temperature (2-10 minutes depending on amount of heat introduced).
11. Step 8), 9) and 10) are repeated until the alignment is according the specified "U" (which is a function of speed and agitator type).
12. The spot areas where the shaft has been heated and aligned using the welding torch must be cleaning using chemical pickling and or mechanical abrasive polishing.

6.6 Support bearing alignment

The inner ring and the outer ring of the bearing MUST be aligned at all times during operation. This is checked by the alignment of the red line (1) marked on the bearing inside the lantern.

The Agitator must NOT resume operation if the bearing is out of alignment, before the cause of misalignment has been established and corrected.

Before re-commissioning, the support bearing must be checked for grease loss and must be able to turn freely. Sign of grease loss could indicate that the rubber seals in the bearing are warn out and the bearing must be replaced.

In doubt cases Alfa Laval recommends to replace the bearing.

The support bearing must be replaced if it has run in the state "out of alignment" for more than 600h. If the running period is less than 500h the support bearing can be reset and continue operation.

CAUTION!
The cause of misalignment in the support bearing can be due to worn out bearings in the gearbox. If this is the case, the Agitator cannot be re-commissioned before the gearbox has been replaced.

Dust accumulation can also cause misalignment. All dust must therefore be removed during the inspection before resuming operation.

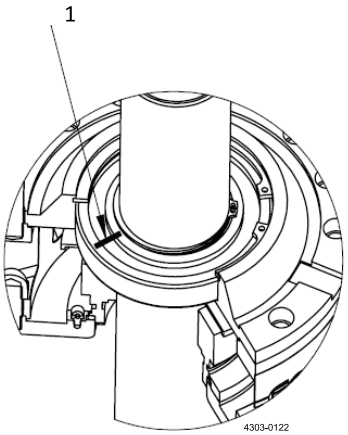

6.7 Use of frequency converter drive (VLT)

CAUTION!
The speed of the agitator must be monitored if frequency converter drive (VLT) is installed to regulate the speed.

When the motor is controlled by a frequency converter, the manual from the motor manufacturer and the information in the certificate for the motor shall be followed. Temperature monitoring devices must meet the requirements in the directive 2014/34/EU and EN1127-1.

In additional for the speed of agitator EnSaFoil, the operating limits **"Critical speed"** according to the ATEX addendum must **not** be **exceeded** .

NOTE!
The build in function in the frequency converter cannot be used for that.

If the operating limits is to be exceeded it can lead to an ignition source coming affective, **either** by large deflection of the shaft, resulting in mechanical contact to the tank wall, **or** by heat buildup in the mechanical shaft seal, resulting in exceeding the assigned temperature class of the product.

Equipment protective level / safety devices

The Equipment protective level (EPL) has to be realized and integrated completely in the ignition protection system according to the Directives 2014/34/EU, EN ISO 80079-37, §6 and EN ISO 80079-36. The system shall be evaluated and may marked "b2" according to EN ISO 80079-37, §6.

The functions of these ignition protective systems have to be checked before start-up according to the manual from the manufacturer of the system.

The Equipment protection level (EPL) for the monitoring have to meet the demands of EN ISO 80079-37, §6. The functions of these systems have to be checked regularly by the user, according to the manual from the manufacturer of the system.

The reaction time of the ignition protection system must not exceed 2 seconds.
- The reaction time is the period between reaching the shut-down value and until the power is shut-off of the machine.

Required measures of the end user to eliminate ignition hazards:
- With a zone 0/20 inside the tank and zone 1/21 outside, the speed of the agitator has to be monitored with an EPL, corresponding to b2 or two b1 according to EN ISO 80079-37, §6.
- With a zone 1/21 inside and outside the tank the speed of the agitator has to be monitored with an EPL, corresponding to b1 according to EN ISO 80079-37, §6.
- With a zone 2/22 inside and outside the tank no further measures needs to be taken.

If the agitator is supplied with an incremental encoder attached to the motor shaft, it may be used as one of the two independent control measure devices b1. In regard to b2 a second control measure device must be applied and the complete EPL must be assessed acc. to the Directives 2014/34/EU, EN ISO 80079-37, §6 and EN ISO 80079-36.

6.8 Storage

Store the Agitator in dry and clean environments.

Rotate shaft every second week to ensure seal faces do not stick together.

7 Part lists, part drawings and service kits

Agitator ALT ATEX, marking II 1/2G... or II 1/2D...
Note: *For information on item numbers, please refer to the spare part manual, available from the on-line Alfa Laval product catalogue Anytime or the Close at hand spare part catalogue.*

7.1 Agitator ALT ATEX, marking II 1/2G... or II 1/2D...

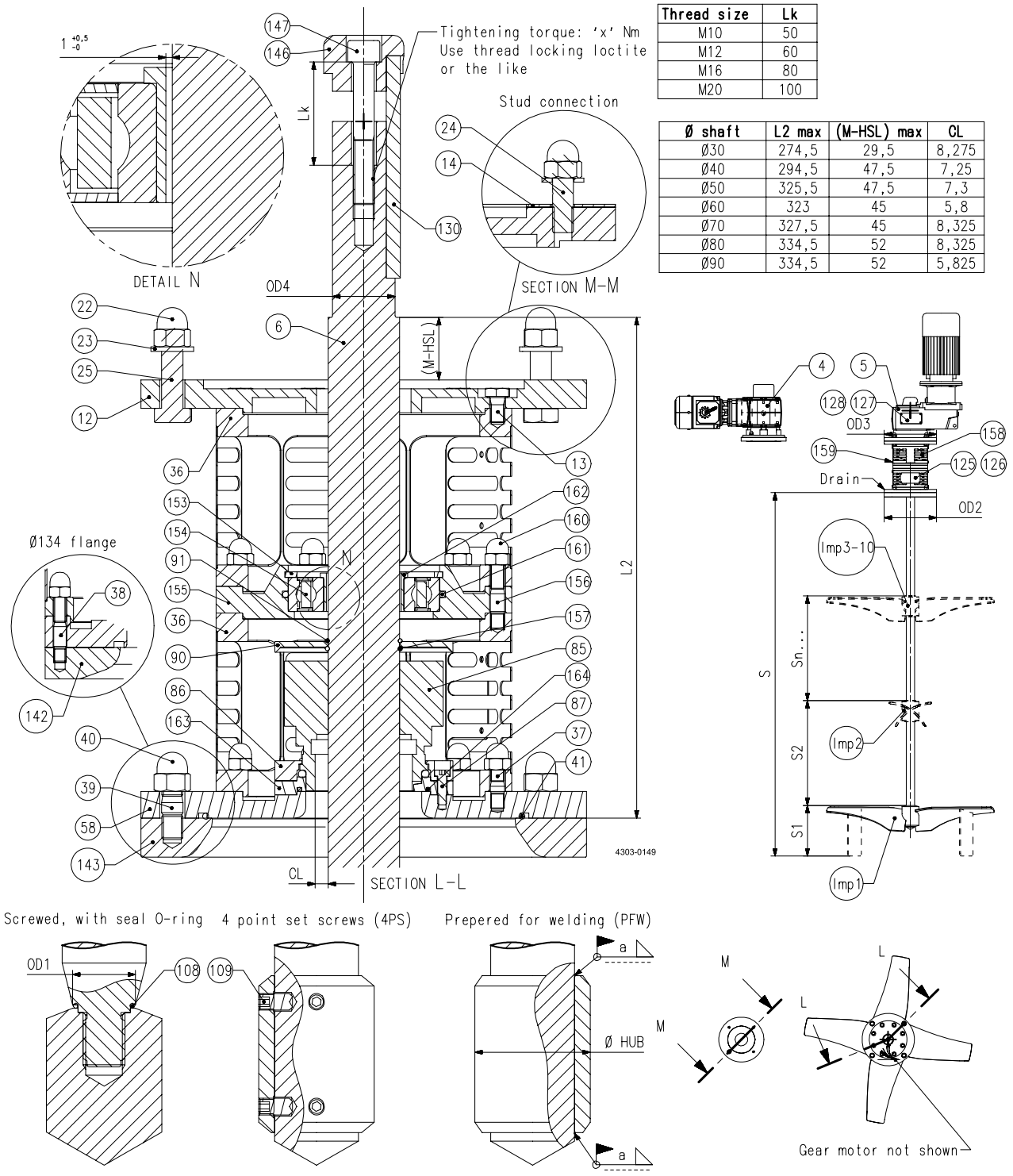

Thread size	Lk
M10	50
M12	60
M16	80
M20	100

Ø shaft	L2 max	(M-HSL) max	CL
Ø30	274,5	29,5	8,275
Ø40	294,5	47,5	7,25
Ø50	325,5	47,5	7,3
Ø60	323	45	5,8
Ø70	327,5	45	8,325
Ø80	334,5	52	8,325
Ø90	334,5	52	5,825

Agitator ALT ATEX, marking II 1/2G... or II 1/2D...
Note: *For information on item numbers, please refer to the spare part manual, available from the on-line Alfa Laval product catalogue Anytime or the Close at hand spare part catalogue.*

Parts list

Pos.	Qty	Denomination
Imp1	1	Impeller device, EnSaFoil (E125-E1900, D2(L), D3(L)) or Low Level (L600-L1700) or EnSaFerm (F450-F1900)
Imp2-Imp10	1	Impeller device, EnSaFoil (E250-E1900, D2, D3) or EnSaFerm (F450-F1900)
4	1	GR gear motor, hollow shaft
5	1	GP gear motor, hollow shaft
6	1	Shaft
12	1	Drive unit flange
13	8	Screw
14	1	Disc spacer
22	4	Cap nut
23	4	Washer
24	4	Stud
25	4	Screw
36	2	Lantern, complete
37	8	Stud
38	8	Stud
39	4	Stud
40	4	Cap nut
41	1	O-ring
58	1	Mounting flange
85 □◆▲	1	S seal
86	1	Ring, retainer
87	4	Screw
90	1	Oil trap
91	2	O-ring
108	1	O-ring
109	4/ Imp	Screw
125	1	Name plate
126	4	Rivet
127	1	Name plate
128	4	Rivet
130	1	Parallel key
142	1	Welding flange (Ø134)
143	1	Welding flange
146	1	Fixing element
147	1	Screw
153	1	Circlip, inner
154	1	Bearing
155	1	Flange, collision protection
156	8	Stud
157	1	Spring, ring
158	4	Guard
159	16	Screw
160	16	Cap nut
161	1	O-ring
162	1	Sleeve
163	1	Drive ring, stationary
164	1	O-ring

Service kits

	Denomination	size: Ø30	size: Ø40	size: Ø50	size: Ø60
Seal kits					
□	Seal kit, S, C/SiC, EPDM	TE2613000114	TE2613000073	TE2613000119	TE2613000184
◆	Seal kit, S, C/SiC, FPM	TE2613000176	TE2613000097	TE2613000089	TE2613000088
▲	Seal kit, S, C/SiC, FFKM	TE2613000302	TE2613000314	9615453801	9615453901

7 Part lists, part drawings and service kits

Agitator ALT ATEX, marking II 1/2G... or II 1/2D...
Note: *For information on item numbers, please refer to the spare part manual, available from the on-line Alfa Laval product catalogue Anytime or the Close at hand spare part catalogue.*

Service kits

	Denomination	size: Ø70	size: Ø80	size: Ø90
Seal kits				
□	Seal kit, S, C/SiC, EPDM	TE2613000206	TE2613000094	TE2613000092
◆	Seal kit, S, C/SiC, FPM	TE2613000207	TE2613000182	TE2613000211
▲	Seal kit, S, C/SiC, FFKM	9615454001	9615454101	9615454201

Parts marked with □◆▲ are included in the service kits.

Agitator ALT ATEX, marking II 1/2G... or II 1/2D...
Note: *For information on item numbers, please refer to the spare part manual, available from the on-line Alfa Laval product catalogue Anytime or the Close at hand spare part catalogue.*

This page is intentionally left blank

Agitator ALT ATEX, marking II 2G... or II 2D...
Note: *For information on item numbers, please refer to the spare part manual, available from the on-line Alfa Laval product catalogue Anytime or the Close at hand spare part catalogue.*

7.2 Agitator ALT ATEX, marking II 2G... or II 2D...

Thread size	Lk
M10	50
M12	60
M16	80
M20	100

Ø shaft	L2 max	(M-HSL) max	CL
Ø30	159,5	29,5	8,275
Ø40	179,5	47,5	7,25
Ø50	200,5	47,5	7,3
Ø60	198	45	5,8
Ø70	202,5	45	8,325
Ø80	209,5	52	8,325
Ø90	209,5	52	5,825

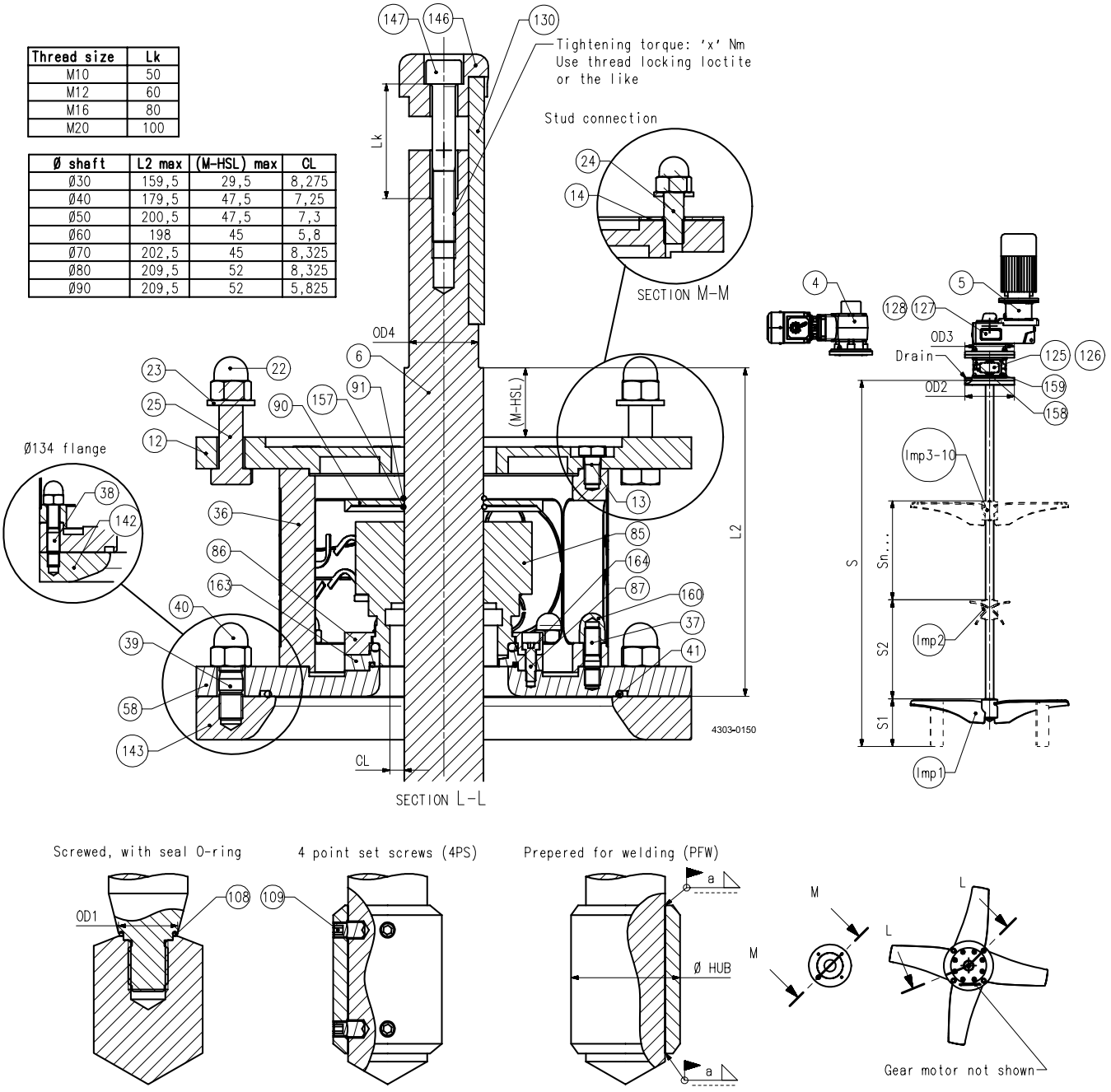

Agitator ALT ATEX, marking II 2G... or II 2D...
Note: *For information on item numbers, please refer to the spare part manual, available from the on-line Alfa Laval product catalogue Anytime or the Close at hand spare part catalogue.*

Parts list

Pos.	Qty	Denomination
Imp1	1	Impeller device, EnSaFoil (E125-E1900, D2(L), D3(L)) or Low Level (L600-L1700) or EnSaFerm (F450-F1900)
Imp2-Imp10	1	Impeller device, EnSaFoil (E250-E1900, D2, D3) or EnSaFerm (F450-F1900)
4	1	GR gear motor, hollow shaft
5	1	GP gear motor, hollow shaft
6	1	Shaft
12	1	Drive unit flange
13	8	Screw
14	1	Disc spacer
22	4	Cap nut
23	4	Washer
24	4	Stud
25	4	Screw
36	2	Lantern, complete
37	8	Stud
38	8	Stud
39	4	Stud
40	4	Cap nut
41	1	O-ring
58	1	Mounting flange
85 □◆▲	1	S seal
86	1	Ring, retainer
87	4	Screw
90	1	Oil trap
91	2	O-ring
108	1	O-ring
109	4/ Imp	Screw
125	1	Name plate
126	4	Rivet
127	1	Name plate
128	4	Rivet
130	1	Parallel key
142	1	Welding flange (Ø134)
143	1	Welding flange
146	1	Fixing element
147	1	Screw
157	1	Spring, ring
158	2	Guard
159	8	Screw
160	8	Cap nut
	12	Cap nut
163	1	Drive ring, stationary
164	1	O-ring

7 Part lists, part drawings and service kits

Agitator ALT ATEX, marking II 2G... or II 2D...
Note: *For information on item numbers, please refer to the spare part manual, available from the on-line Alfa Laval product catalogue Anytime or the Close at hand spare part catalogue.*

Service kits

	Denomination	size: Ø30	size: Ø40	size: Ø50	size: Ø60
Seal kits					
□	Seal kit, S, C/SiC, EPDM	TE2613000114	TE2613000073	TE2613000119	TE2613000184
◆	Seal kit, S, C/SiC, FPM	TE2613000176	TE2613000097	TE2613000089	TE2613000088
▲	Seal kit, S, C/SiC, FFKM	TE2613000302	TE2613000314	9615453801	9615453901

Service kits

	Denomination	size: Ø70	size: Ø80	size: Ø90
Seal kits				
□	Seal kit, S, C/SiC, EPDM	TE2613000206	TE2613000094	TE2613000092
◆	Seal kit, S, C/SiC, FPM	TE2613000207	TE2613000182	TE2613000211
▲	Seal kit, S, C/SiC, FFKM	9615454001	9615454101	9615454201

Agitator ALT ATEX, marking II 2G... or II 2D...
Note: *For information on item numbers, please refer to the spare part manual, available from the on-line Alfa Laval product catalogue Anytime or the Close at hand spare part catalogue.*

This page is intentionally left blank

Agitator ALT ATEX, shaft divided, marking II 1/2G... or II 1/2D...
Note: *For information on item numbers, please refer to the spare part manual, available from the on-line Alfa Laval product catalogue Anytime or the Close at hand spare part catalogue.*

7.3 Agitator ALT ATEX, shaft divided, marking II 1/2G... or II 1/2D...

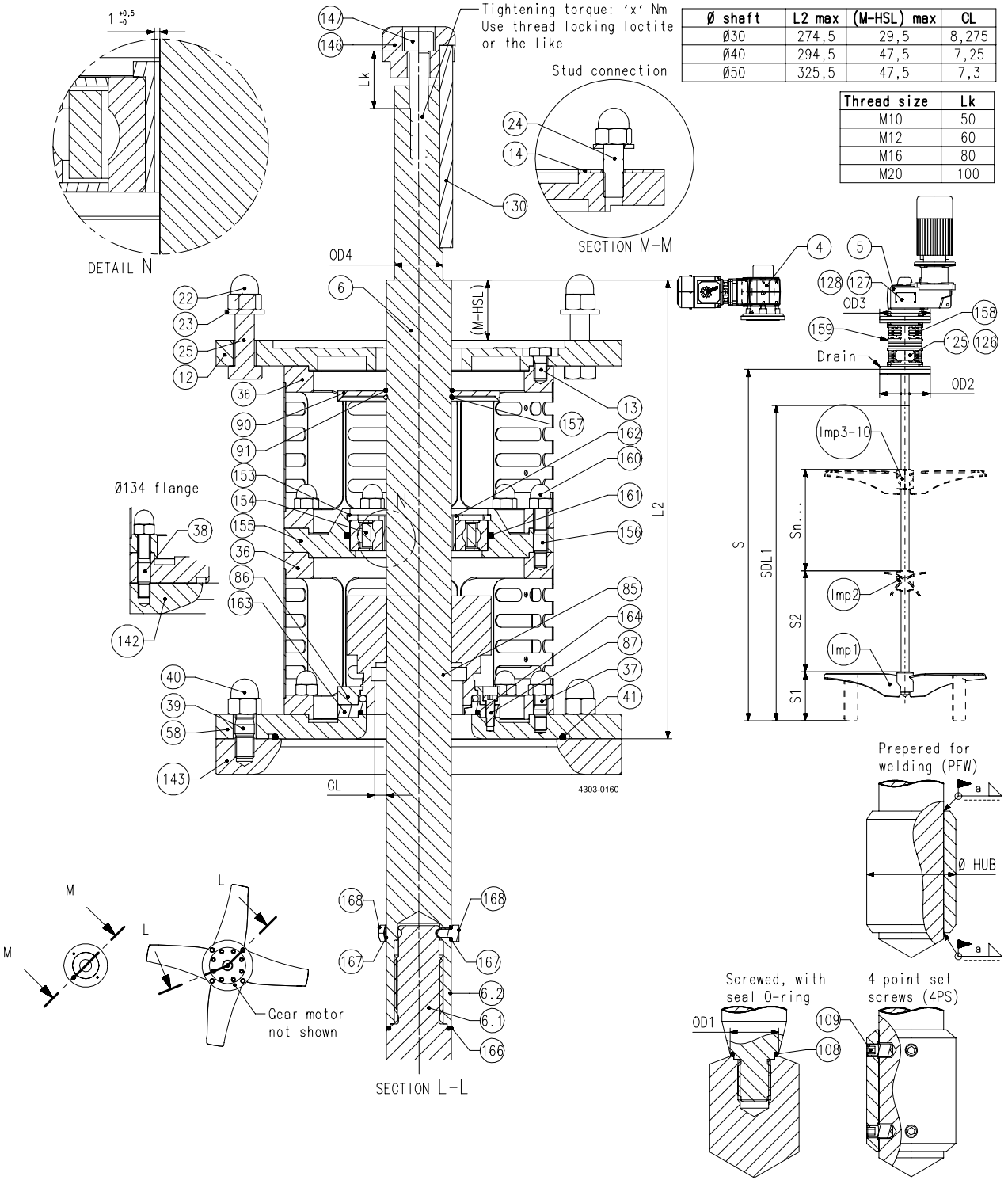

Ø shaft	L2 max	(M-HSL) max	CL
Ø30	274,5	29,5	8,275
Ø40	294,5	47,5	7,25
Ø50	325,5	47,5	7,3

Thread size	Lk
M10	50
M12	60
M16	80
M20	100

Agitator ALT ATEX, shaft divided, marking II 1/2G... or II 1/2D...
Note: *For information on item numbers, please refer to the spare part manual, available from the on-line Alfa Laval product catalogue Anytime or the Close at hand spare part catalogue.*

Parts list

Pos.	Qty	Denomination
Imp1	1	Impeller device, EnSaFoil (E125-E1900, D2(L), D3(L)) or Low Level (L600-L1700) or EnSaFerm (F450-F1900)
Imp2-Imp10	1	Impeller device, EnSaFoil (E250-E1900, D2, D3) or EnSaFerm (F450-F1900)
4	1	GR gear motor, hollow shaft
5	1	GP gear motor, hollow shaft
6	1	Shaft divided
12	1	Drive unit flange
13	8	Screw
14	1	Disc spacer
22	4	Cap nut
23	4	Washer
24	4	Stud
25	4	Screw
36	2	Lantern, complete
37	8	Stud
38	8	Stud
39	4	Stud
40	4	Cap nut
41	1	O-ring
58	1	Mounting flange
85 □◆▲	1	S seal
86	1	Ring, retainer
87	4	Screw
90	1	Oil trap
91	2	O-ring
108	1	O-ring
109	4/ Imp	Screw
125	1	Name plate
126	4	Rivet
127	1	Name plate
128	4	Rivet
130	1	Parallel key
142	1	Welding flange (Ø134)
143	1	Welding flange
146	1	Fixing element
147	1	Screw
153	1	Circlip, inner
154	1	Bearing
155	1	Flange, collision protection
156	8	Stud
157	1	Spring, ring
158	4	Guard
159	16	Screw
160	16	Cap nut
161	1	O-ring
162	1	Sleeve
163	1	Drive ring, stationary
164	1	O-ring
166	1	O-ring
167	2	O-ring
168	2	Screw

Agitator ALT ATEX, shaft divided, marking II 1/2G... or II 1/2D...
Note: *For information on item numbers, please refer to the spare part manual, available from the on-line Alfa Laval product catalogue Anytime or the Close at hand spare part catalogue.*

Service kits

	Denomination	size: Ø30	size: Ø40	size: Ø50
Seal kits				
□	Seal kit, S, C/SiC, EPDM	TE2613000114	TE2613000073	TE2613000119
◆	Seal kit, S, C/SiC, FPM	TE2613000176	TE2613000097	TE2613000089
▲	Seal kit, S, C/SiC, FFKM	TE2613000302	TE2613000314	9615453801

Agitator ALT ATEX, shaft divided, marking II 1/2G... or II 1/2D...
Note: *For information on item numbers, please refer to the spare part manual, available from the on-line Alfa Laval product catalogue Anytime or the Close at hand spare part catalogue.*

This page is intentionally left blank

Agitator ALT ATEX, shaft divided, marking II 2G... or II 2D...
Note: *For information on item numbers, please refer to the spare part manual, available from the on-line Alfa Laval product catalogue Anytime or the Close at hand spare part catalogue.*

7.4 Agitator ALT ATEX, shaft divided, marking II 2G... or II 2D...

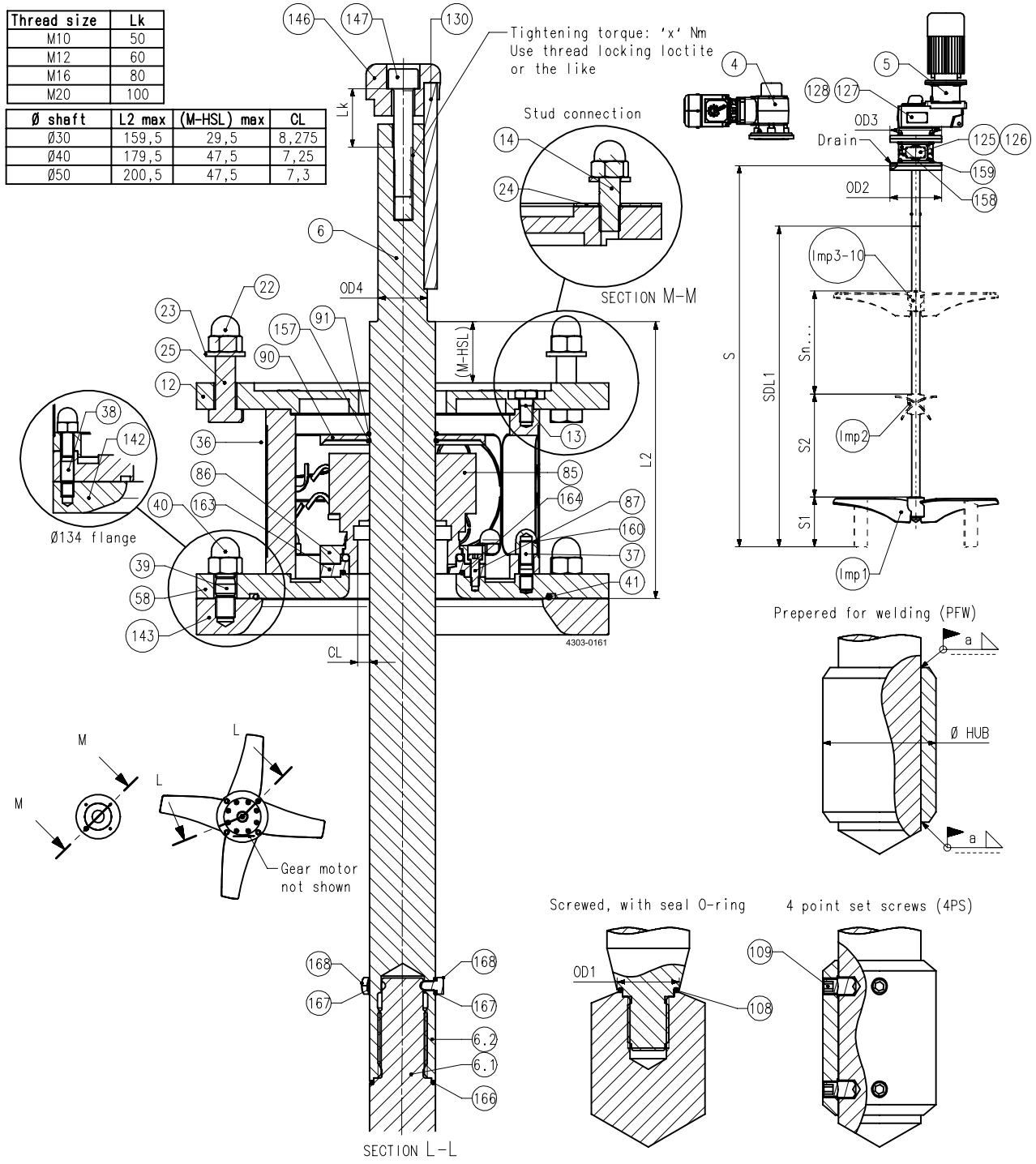

Agitator ALT ATEX, shaft divided, marking II 2G... or II 2D...
Note: *For information on item numbers, please refer to the spare part manual, available from the on-line Alfa Laval product catalogue Anytime or the Close at hand spare part catalogue.*

Parts list

Pos.	Qty	Denomination
Imp1	1	Impeller device, EnSaFoil (E125-E1900, D2(L), D3(L)) or Low Level (L600-L1700) or EnSaFerm (F450-F1900)
Imp2-Imp10	1	Impeller device, EnSaFoil (E250-E1900, D2, D3) or EnSaFerm (F450-F1900)
4	1	GR gear motor, hollow shaft
5	1	GP gear motor, hollow shaft
6	1	Shaft divided
12	1	Drive unit flange
13	8	Screw
14	1	Disc spacer
22	4	Cap nut
23	4	Washer
24	4	Stud
25	4	Screw
36	2	Lantern, complete
37	8	Stud
38	8	Stud
39	4	Stud
40	4	Cap nut
41	1	O-ring
58	1	Mounting flange
85 □◆▲	1	S seal
86	1	Ring, retainer
87	4	Screw
90	1	Oil trap
91	2	O-ring
108	1	O-ring
109	4/ Imp	Screw
125	1	Name plate
126	4	Rivet
127	1	Name plate
128	4	Rivet
130	1	Parallel key
142	1	Welding flange (Ø134)
143	1	Welding flange
146	1	Fixing element
147	1	Screw
157	1	Spring, ring
158	2	Guard
159	8	Screw
160	8	Cap nut
	12	Cap nut
163	1	Drive ring, stationary
164	1	O-ring
166	1	O-ring
167	2	O-ring
168	2	Screw

Agitator ALT ATEX, shaft divided, marking II 2G... or II 2D...
Note: *For information on item numbers, please refer to the spare part manual, available from the on-line Alfa Laval product catalogue Anytime or the Close at hand spare part catalogue.*

Service kits

	Denomination	size: Ø30	size: Ø40	size: Ø50
Seal kits				
□	Seal kit, S, C/SiC, EPDM	TE2613000114	TE2613000073	TE2613000119
◆	Seal kit, S, C/SiC, FPM	TE2613000176	TE2613000097	TE2613000089
▲	Seal kit, S, C/SiC, FFKM	TE2613000302	TE2613000314	9615453801

Agitator ALT ATEX, shaft divided, marking II 2G... or II 2D...
Note: *For information on item numbers, please refer to the spare part manual, available from the on-line Alfa Laval product catalogue Anytime or the Close at hand spare part catalogue.*

This page is intentionally left blank

7.5 Tools

To assist installation and maintenance of the Agitator, an original Alfa Laval Shaft Retainer is available. Once the bolts are tightened the shaft is retained by a well-defined torque leaving no doubt about safety. The amterial used protects the polished surface against scratching.

A very useful tool during maintenance of the Agitator.

Designed to support Agitator at a weight up to 500 kilogram.

Description	Item no.
Shaft diameter between Ø30 and Ø60	TE2608084880

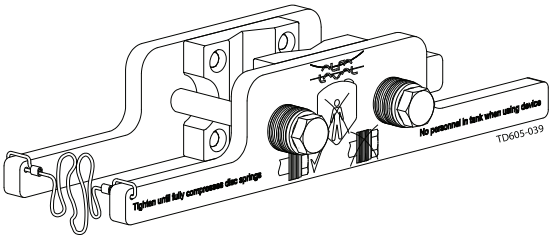

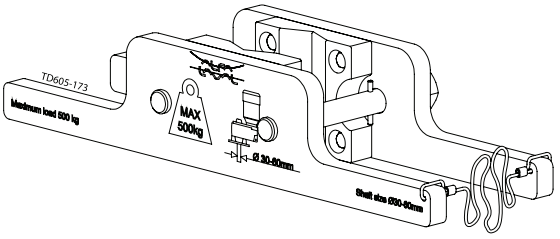

Shaft retainer - mounting instructions :

WARNING!
Ensure no personnel inside tank.

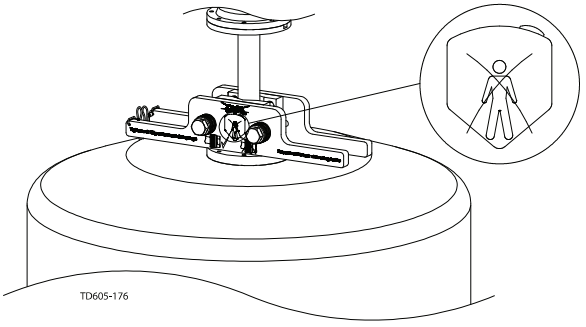

CAUTION!
Ensure weight of Agitator is no higher than 500 kilogram.

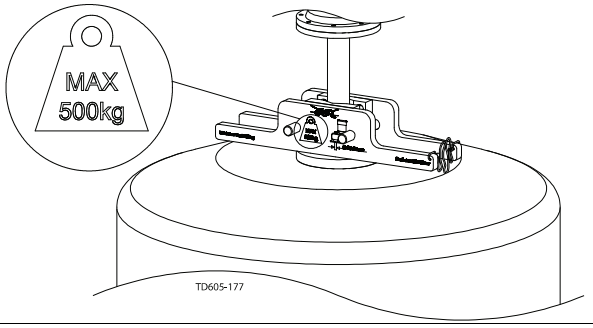

Step 1
Dismantle back plate by loosen both screws on the shaft retainer.

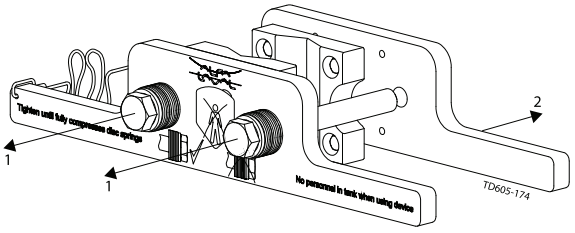

Step 2
1. Dismantle Agitator from welding flange.
2. Lift up Agitator.

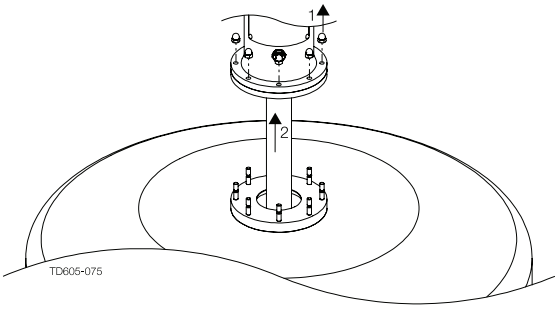

Step 3
Tighten both of the screws on the shaft retainer tool equal.

CAUTION!
Ensure that the springs are completely compressed.

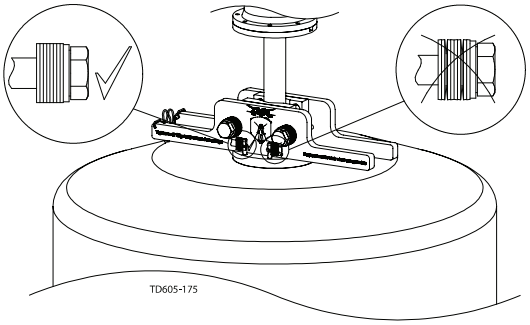

8 Appendix

8.1 Drive unit instructions

The drive unit instruction is supplied together with the Agitator in a separate supplier instruction manual. Important requirements for installation, operation and service is to be found in this separate instruction manual and must be follow very carefully.

The supplier instruction manual can be downloaded from www.alfalaval.com.

(http://ebusiness.alfalaval.org/alweb/view/category/1E4DC4E7-D4BB-45A2-99CF-107263F60FFB).

How to contact Alfa Laval
Contact details for all countries are
continually updated on our website.
Please visit www.alfalaval.com to access the information directly.