Yeast slurry mixing using rotary jet mixer technology

Royal Unibrew, Denmark **Case story**

Yeast slurry mixing
In most breweries, yeast is reutilized. Cropped yeast from one fermentor, for example, is pitched into another. Because there are no assurances that a fermentor is ready for pitching when yeast from another is cropped, the yeast crop is kept in a yeast storage tank until pitching. If this tank is not mixed, the yeast will settle. This means that pitching will be performed with a non-homogenous slurry, making this operation difficult to perform consistently. Between batches, the tanks must be cleaned (CIP).

Client
The Danish brewery Royal Unibrew, Faxe Brewery.

Problem
Sanitary problems with the existing side entry impellers led Royal Unibrew to dismantle these, which resulted in non-homogeneous yeast slurries and difficulties in pitching consistently.

Solution
Eight yeast storage tanks were equipped with Alfa Laval Iso-Mix rotary jet mixers, which enabled the use of the same rotary jet mixer for mixing and for cleaning between 'batches'. The solution was supplied as a turnkey project utilizing custom-designed rotary jet mixers. The pumps used in the solution are frequency controlled, making it possible to operate with different mixing intensities during the holding cycle.

Result
In the new setup, it is possible to use the same piece of equipment for cleaning and for supplying a homogeneous yeast slurry for pitching. The setup is simple, and provides low maintenance costs and a higher sanitary level than the use of another agitator solution.

Facts
- Simple setup
- Low maintenance costs
- High sanitary level

System data
Volume: 15 m^3
Tank diameter: 1.88 m
Tank height: 5.22 m
Mixer type: IM 15 with 4 x 8 mm nozzles
Temperature: 5°C
Pressure, pump: 2–5 bar
Viscosity: 1–8000 cP (end-product 20–300 cP)

Technology and operation

The Alfa Laval rotary jet mixer has either two or four rotating jet nozzles positioned under the liquid surface at the top of the tank. A variable speed pump circulates the liquid to be mixed through the tank in a closed loop system. The resulting flow drives a gearing system in the rotary jet mixer, which causes the nozzles to rotate around both the horizontal and vertical axes.

This double rotation enables the jets to produce mixing action and extend its reach throughout the entire tank volume. This results in fast and efficient mixing of the injected liquid, gas or powder. The rotary jet mixer may also be used for cleaning the tank; cleaning fluids are then fed through the nozzles of the rotary jet mixer into the tank.

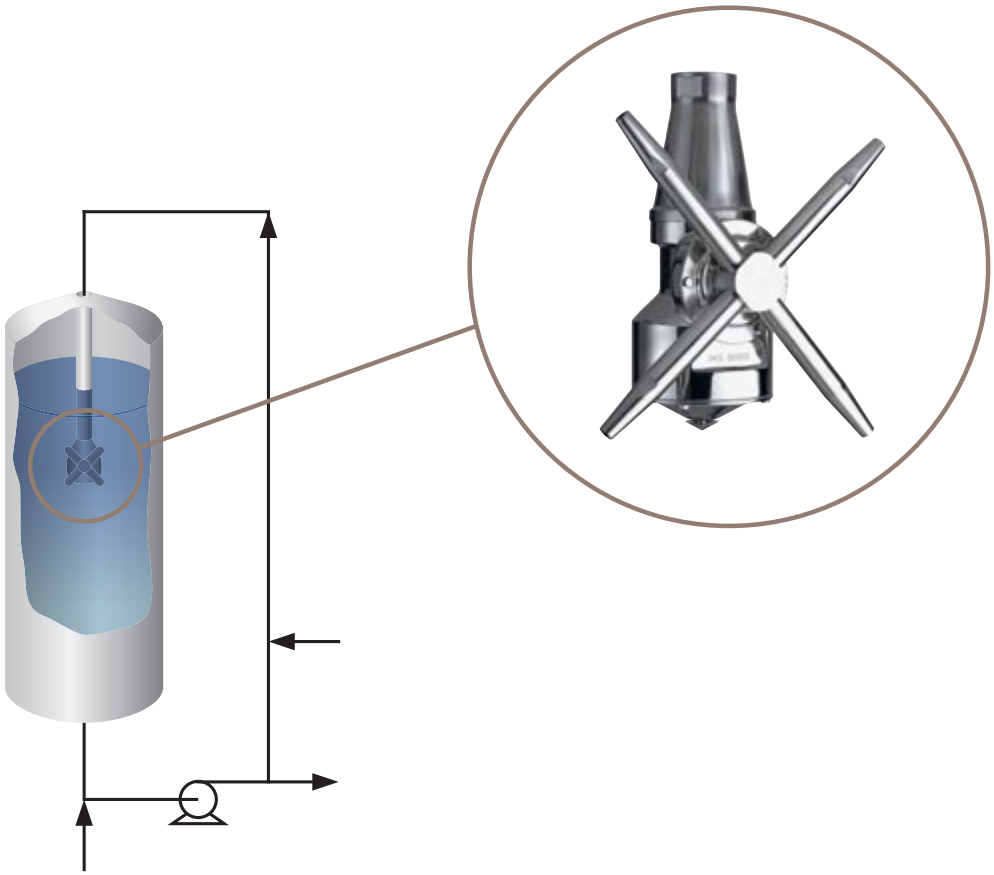

How to contact Alfa Laval
Up-to-date Alfa Laval contact details for all countries are always available on our website at www.alfalaval.com